AXMINSTER Hobby SERIES

Code **505176**

MS210S

Sliding Mitre Saw

AXMINSTER • THREE YEAR GUARANTEE •

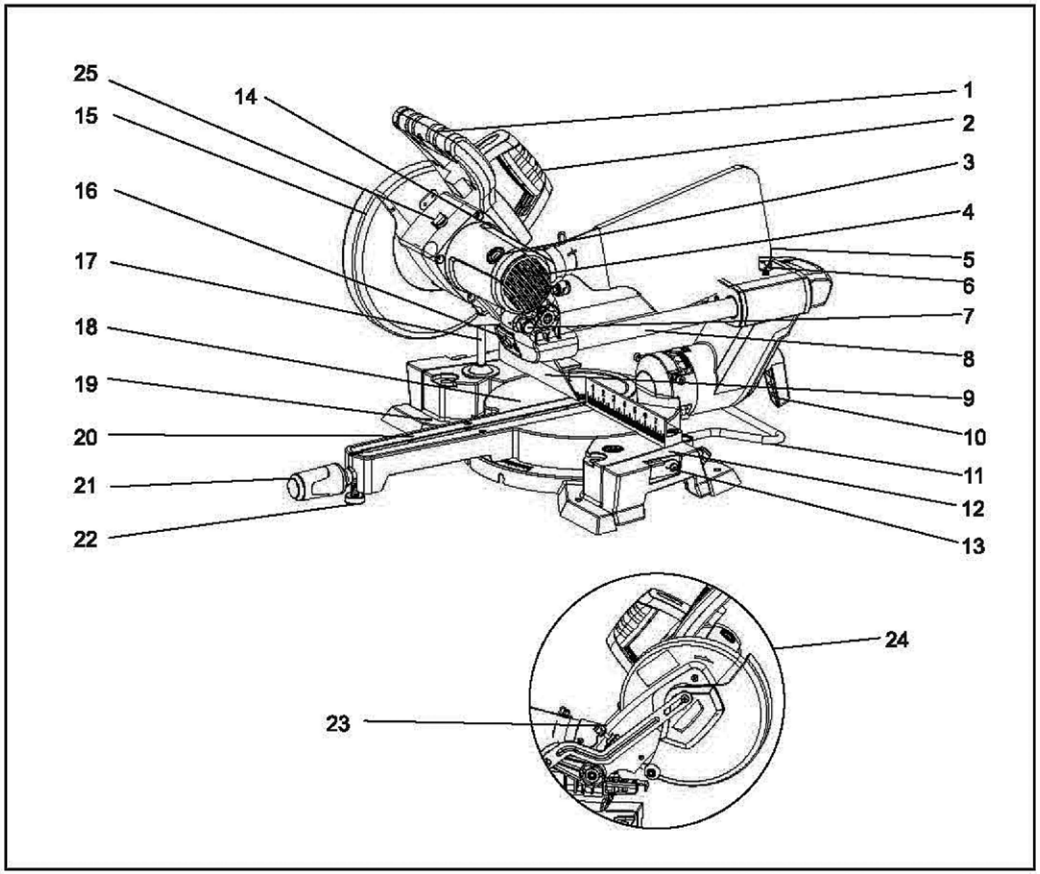
25
14
15
16
17
18
19
20
21
22
1
2
3
4
5
6
7
8
9
10
11
12
13
24
23

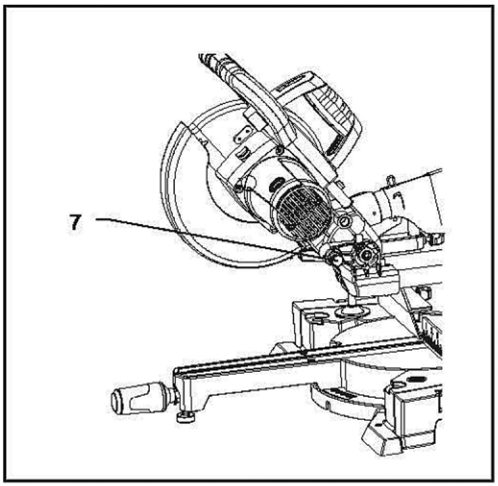
7

1

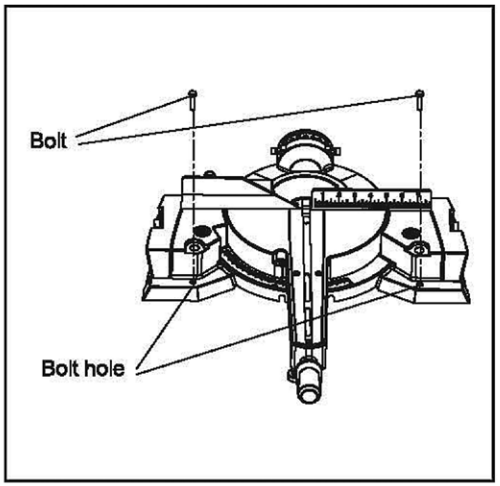
Bolt
Bolt hole

2

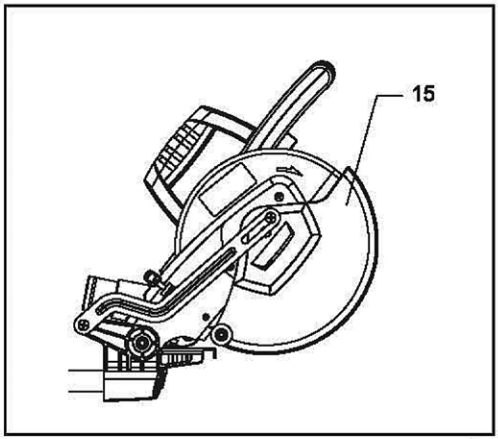
15

3

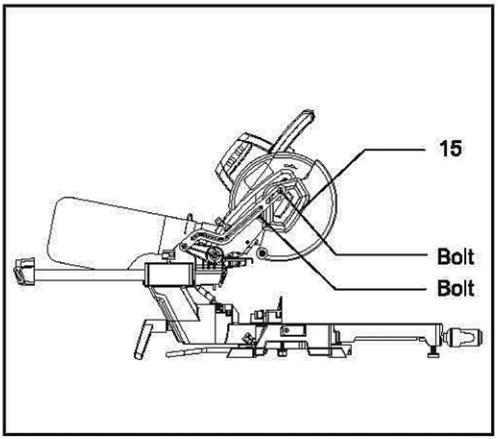
15
Bolt
Bolt

4

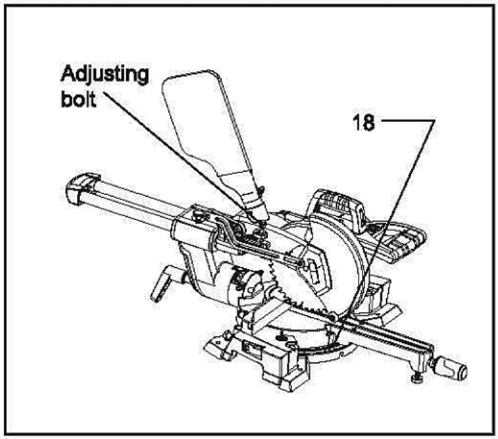
Adjusting
bolt
18

5

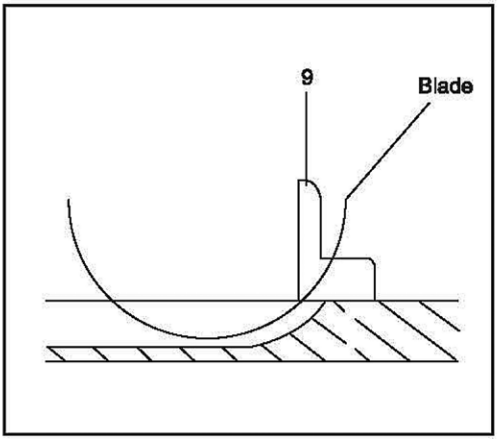
9
Blade

6

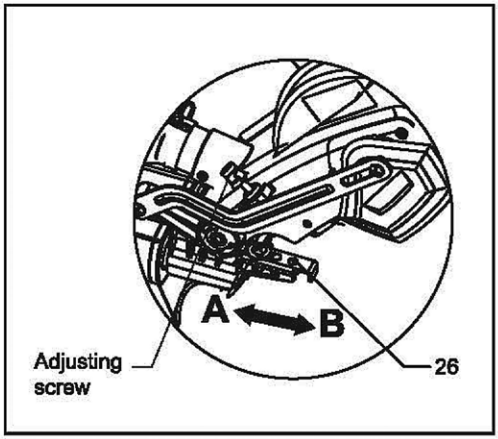
A
B
Adjusting
screw
26

7

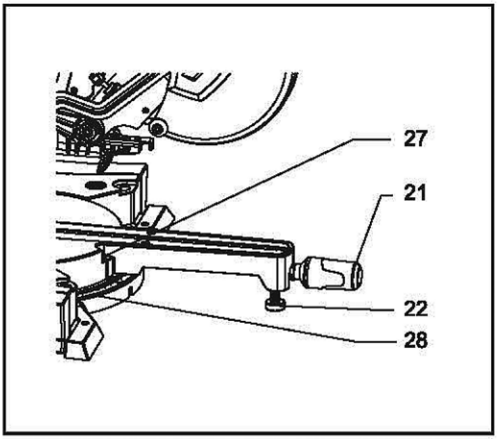
27
21
22
28

8

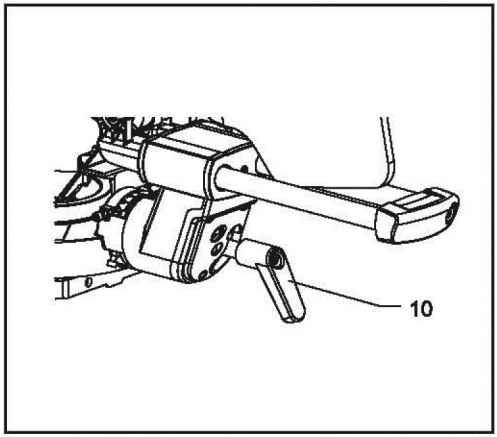

9

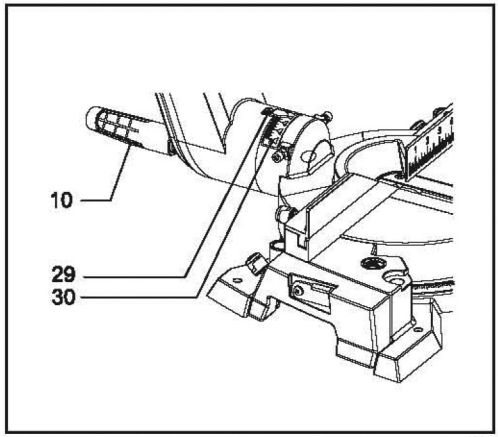

10

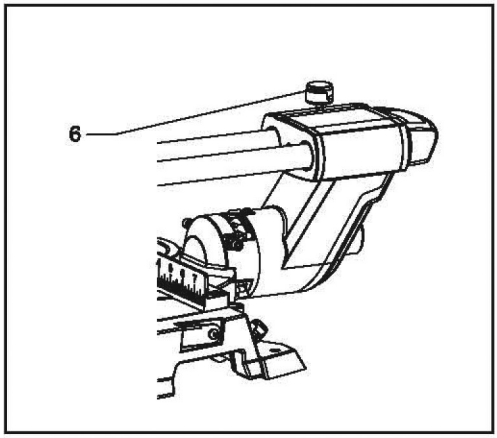

11

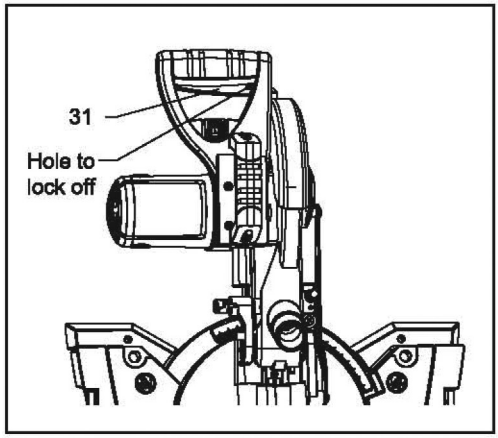

12

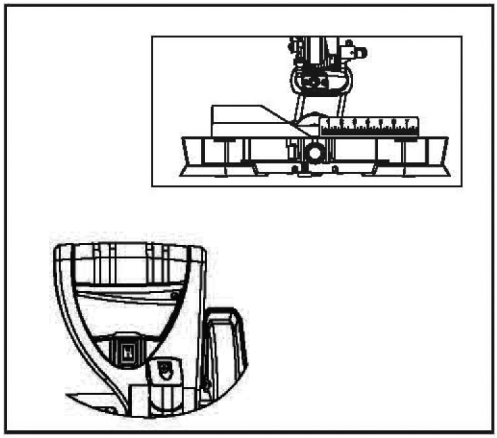

13

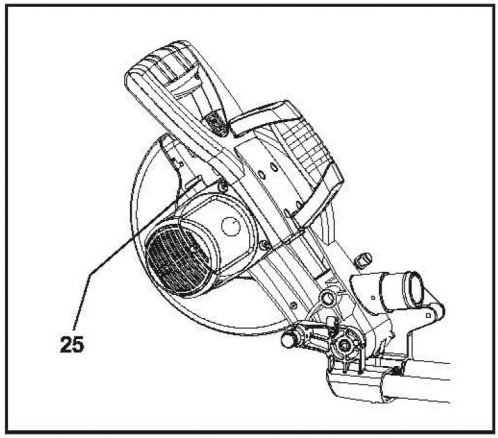

14

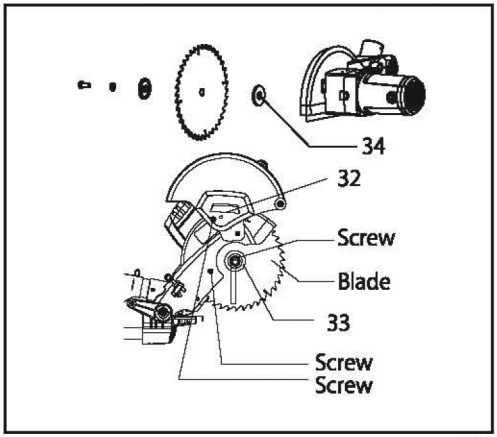

15

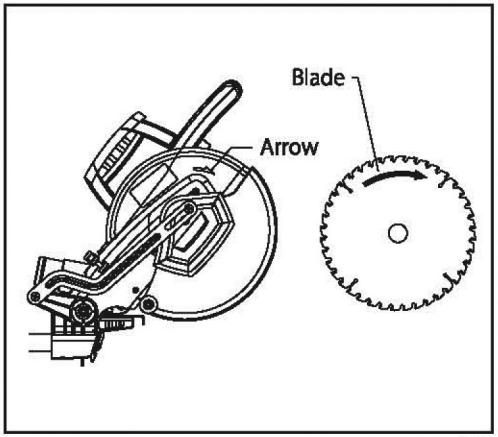

16

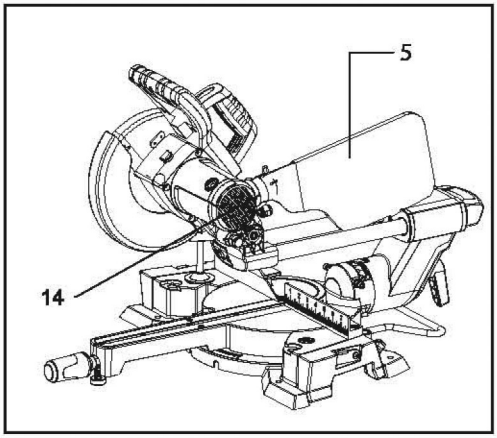

17

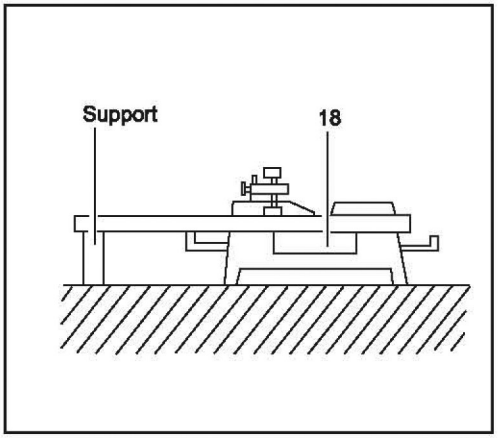

18

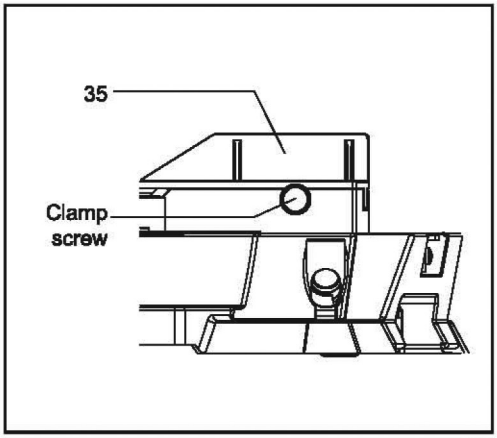

19

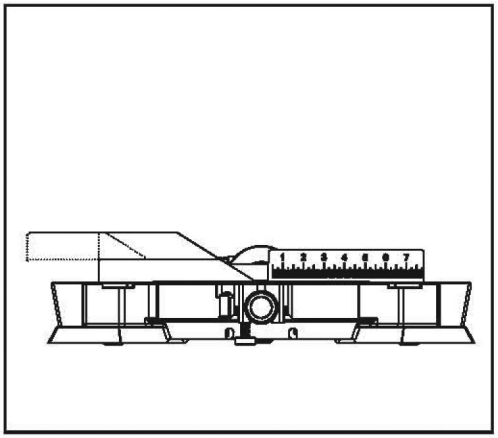

20

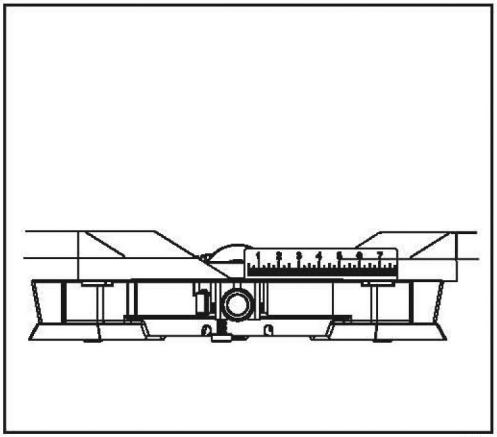

21

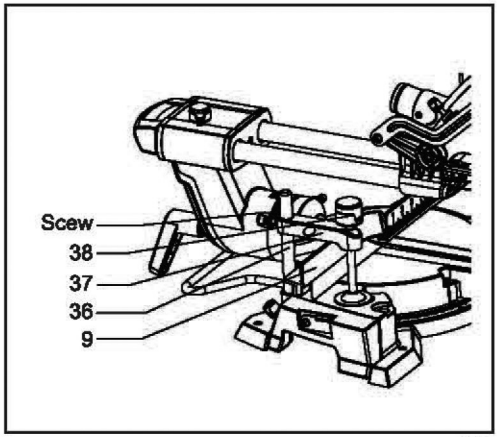

22

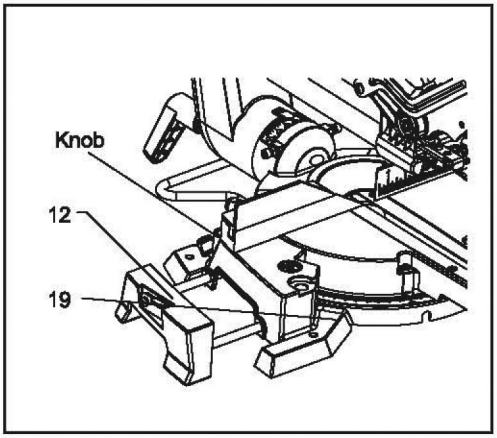

23

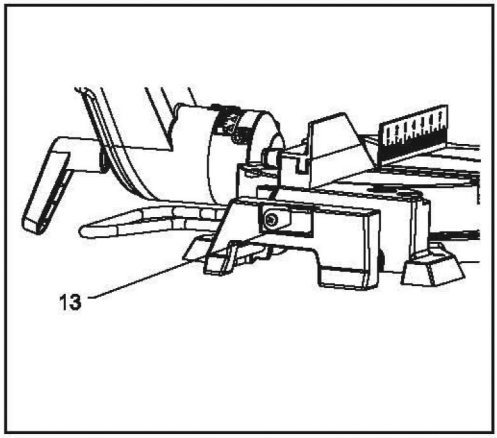

23-1

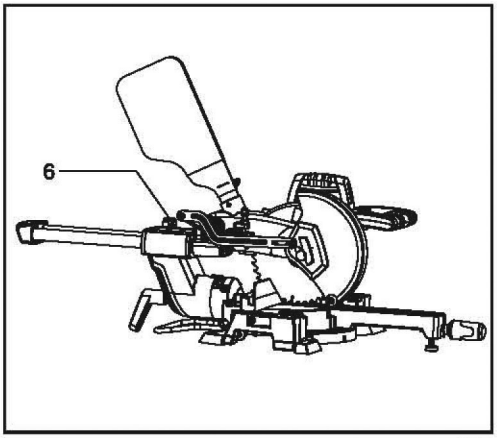

24

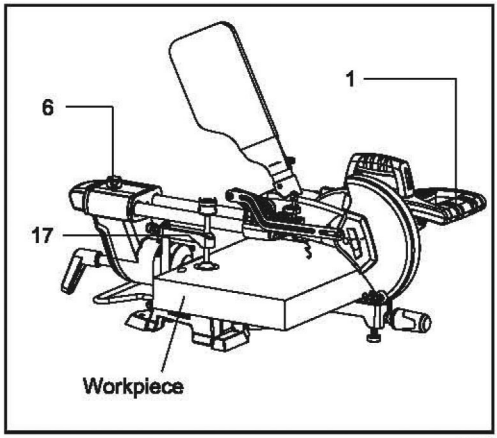

25

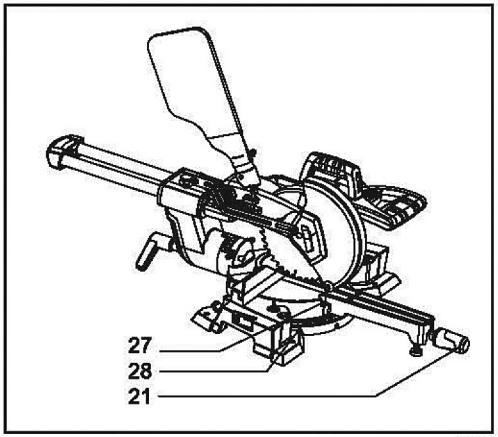

26

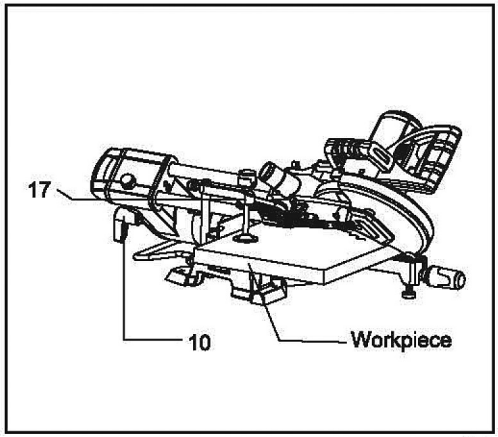

27

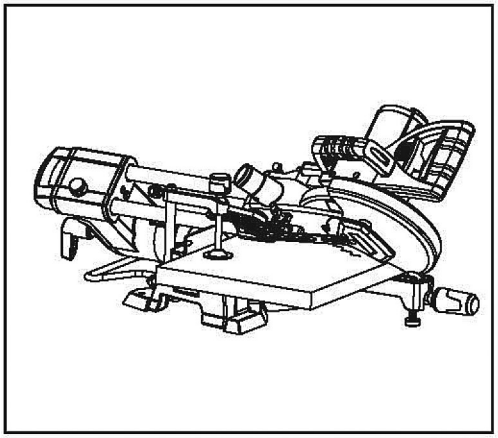

28

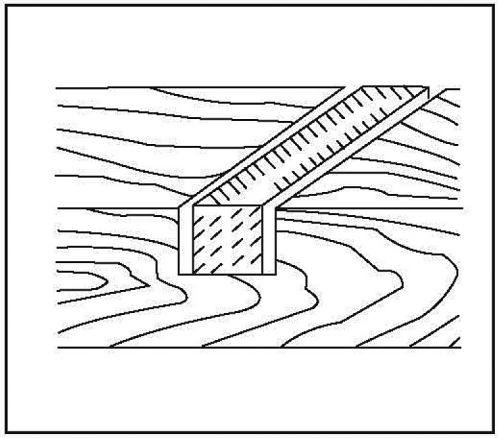

29

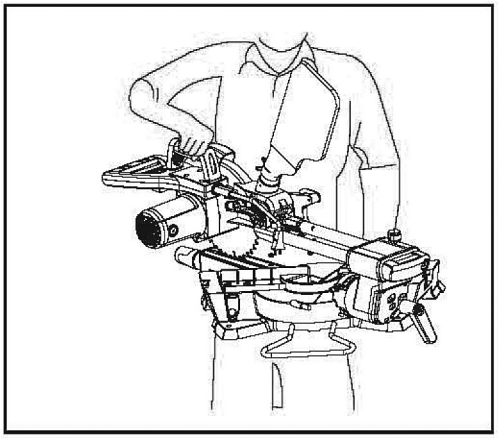

30

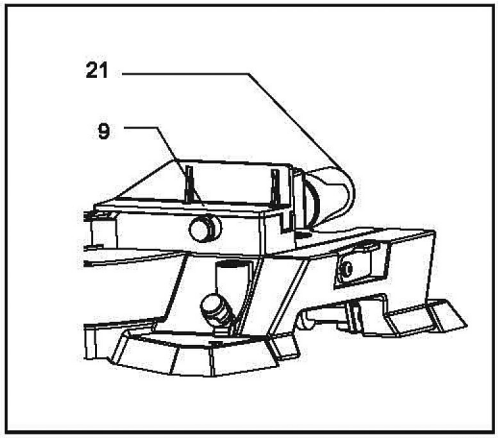

31

To ensure your safety and satisfaction, carefully read through this OWNER'S MANUAL before using the product.

General Safety Rules

WARNING! Read all instructions. Failure to follow all instructions listed below may result in electric shock, fire and/or serious injury. The term "power tool" in all of the warnings listed below refers to your mains-operated (corded) power tool or battery-operated (cordless) power tool.

SAVE THESE INSTRUCTIONS

1) **Work area**
   a) **Keep work area clean and well lit.** Cluttered and dark areas invite accidents.
   b) **Do not operate power tools in explosive atmospheres, such as in the presence of flammable liquids, gases or dust.** Power tools create sparks which may ignite the dust or fumes.
   c) **Keep children and bystanders away while operating a power tool.** Distractions can cause you to lose control.

2) **Electrical safety**
   a) **Power tool plugs must match the outlet. Never modify the plug in any way. Do not use any adapter plugs with earthed (grounded) power tools.** Unmodified plugs and matching outlets will reduce risk of electric shock
   b) **Avoid body contact with earthed or grounded surfaces such as pipes, radiators, ranges and refrigerators. There is an increased risk of electric shock if your body is earthed or grounded.**
   c) **Do not expose power tools to rain or wet conditions.** Water entering a power tool will increase the risk of electric shock.
   d) **Do not abuse the cord. Never use the cord for carrying, pulling or unplugging the power tool. Keep cord away from heat, oil, sharp edges or moving parts.** Damaged or entangled cords increase the risk of electric shock.
   e) **When operating a power tool outdoors, use an extension cord suitable for outdoor use.** Use of a cord suitable for outdoor use reduces the risk of electric shock.

3) **Personal safety**
   a) **Stay alert, watch what you are doing and use common sense when operating a power tool. Do not use a power tool while you are tired or under the influence of drugs, alcohol or medication.** A moment of inattention while operating power tools may result in serious personal injury.
   b) **Use safety equipment. Always wear eye protection.** Safety equipment such as dust mask, non-skid safety shoes, hard hat, or hearing protection used for appropriate conditions will reduce personal injuries.
   c) **Avoid accidental starting. Ensure the switch is in the off-position before plugging in.** Carrying power tools with your finger on the switch or plugging in power tools that have the switch on invites accidents.
   d) **Remove any adjusting key or wrench before turning the power tool on.** A wrench or a key left attached to a rotating part of the power tool may result in personal injury.
   e) **Do not overreach. Keep proper footing and balance at all times.** This enables better control of the power tool in unexpected situations.
   f) **Dress properly. Do not wear loose clothing or jewellery. Keep your hair, clothing and gloves away from moving parts.** Loose clothes, jewellery or long hair can be caught in moving parts.
   g) **If devices are provided for the connection of dust extraction and collection facilities, ensure these are connected and properly used.** Use of these devices can reduce dust-related hazards.

4) **Power tool use and care**
   a) **Do not force the power tool. Use the correct power tool for your application.** The correct power tool will do the job better and safer at the rate for which it was designed.
   b) **Do not use the power tool if the switch does not turn it on and off.** Any power tool that cannot be controlled with the switch is dangerous and must be repaired.
   c) **Disconnect the plug from the power source and/or the battery pack from the power tool before making any adjustments, changing accessories, or storing power tools.** Such preventive safety measures reduce the risk of starting the power tool accidentally.
   d) **Store idle power tools out of the reach of children and do not allow persons unfamiliar with the power tool or these instructions to operate the power tool.** Power tools are dangerous in the hands of untrained users.
   e) **Maintain power tools. Check for misalignment or binding of moving parts, breakage of parts and any other condition that may affect the power tools operation. If damaged, have the power tool repaired before use.** Many accidents are caused by poorly maintained power tools.
   f) **Keep cutting tools sharp and clean.** Properly maintained cutting tools with sharp cutting edges are less likely to bind and are easier to control.
   g) **Use the power tool, accessories and tool bits etc., in accordance with these instructions and in the manner intended for the particular type of power tool, taking into account the working conditions and the work to be performed.** Use of the power tool for operations different from those intended could result in a hazardous situation.

5) **Service**
   a) **Have your power tool serviced by a qualified repair person using only identical replacement parts.** This will ensure that the safety of the power tool is maintained.

ADDITIONAL SAFETY INSTRUCTIONS FOR SLIDING COMPOUND MITRE SAW

1) Wear eye protection.
2) Keep hands out of path of saw blade. Avoid contact with any coasting blade. It can still cause severe injury.
3) Do not operate saw without guards in place. Check blade guard for proper closing before each use. Do not operate saw if blade guard does not move freely and close instantly. Never clamp or tie the blade guard in the open position
4) Do not perform any operation freehand. The workpiece must be secured firmly against the turn base and guide fence with the vise during all operations. Never use your hand to secure the workpiece.
5) Never reach around the saw blade.
6) Turn off tool and wait for saw blade to stop before moving workpiece or changing settings.
7) Unplug tool before changing blade or servicing.
8) Always secure all moving portions before carrying the tool.
9) Stopper pin which locks the cutter head down is for carrying and storage purposes only and not for any cutting operations.
10) Do not use the tool in the presence of flammable liquids or gases.
11) Check the blade carefully for cracks or damage before operation.
    Replace cracked or damaged blades immediately.
12) Use only flanges specified for this tool.
13) Be careful not to damage the arbor, flanges (especially the installing surface) or bolt. Damage to these parts could result in blade breakage.
14) Make sure that the turn base is properly secured so it will not move during operation.
15) For your safety, remove the chips, small pieces, etc. from the tabletop before operation.
16) To avoid cutting nails, inspect workpiece and remove all nails from the before operation.
17) Make sure the shaft lock is released before the switch is turned on.
18) Make sure that the blade does not contact the turn base in the lowest position.
19) Hold the handle firmly. Be aware that the saw moves up or down slightly during start-up and stopping.
20) Make sure the blade is not contacting the workpiece before the switch is turned on.
21) Before using the tool on an actual workpiece, let it run for a while. Watch for vibration or wobbling that could indicate poor installation or a poorly balanced blade.
22) Wait until the blade attains full speed before cutting.
23) Stop operation immediately if you notice anything abnormal.
24) Do not attempt to lock the trigger in the on position.
25) Be alert at all times, especially during repetitive, monotonous operations. Do not be lulled into a false sense of security. Blades are extremely unforgiving.
26) Always use accessories recommended in this manual. Use of improper accessories such as abrasive wheels may cause an injury.
27) Do not use the saw to cut anything other than wood.
28) Connect mitre saws to a dust collecting device when sawing.
29) Take care when slotting.
30) Replace the kerf board when worn.
31) Do not use saw blades manufactured from high speed steel.
32) Some dust created from operation contains chemicals known to cause cancer, birth defects or other reproductive harm. Some examples of these chemicals are:
    • Lead from lead-based-painted material and;
    • Arsenic and chromium from chemically-treated lumber.
    Your risk from these exposures varies, depending on how often you do this type of work. To reduce your exposure to these chemicals: work in a well ventilated area and work with approved safety equipment, such as dust masks that are specially designed to filter out microscopic particles.
33) To reduce the emitted noise, always be sure that the blade is sharp and clean.
34) Ensure that operator is adequately trained in the use, adjustment and operation of the machine.
35) Use correctly sharpened saw blades. Observe the maximum speed marked on the saw blade.
36) Refrain from removing any cut-offs or other parts of the workpiece from the cutting area while the tool is running and the saw head is not in the rest position.
37) Wear gloves for handling saw blades (saw blades shall be carried in a holder wherever practicable) and rough material.
38) Do not replace laser with one of a different type.
39) Use the ear protection during cutting to avoid listening injury.

ADDITIONAL SAFETY INSTRUCTIONS FOR LASERS

WARNING: The laser beam potentially causes eye damage. Do not look or stare into the laser beam.

- A laser beam is not a toy, and it should not be used by children. Misuse of the laser line can lead to irreparable eye damage.
- It is strongly advised that you use laser protective eyewear for the specific wavelength of emitted light when working on or near reflective surfaces.
- Do not perform any adjustments that are intended to increase the power of the laser.
- When using the laser line, do not point the laser beam at people and/or reflecting surfaces. Even a low-intensity laser beam can cause eye damage. Do not look directly into the laser beam.
- If the laser line will not be used for more than three months, remove the batteries in order to avoid damage from possible leakage.
- The laser line does not include any user-serviceable components. Do not open the housing in an attempt to repair it.
- Repairs should only be carried out at a service centre or by an authorized service technician.

DESCRIPTION

1. Handle
2. Carrying handle
3. Carbon brush holder cap
4. Motor
5. Dust bag
6. Track arm lock knob
7. Stopper pin
8. Track arm guide bars
9. Guide fence
10. Saw head tilt lock lever
11. Back supporting bracket
12. Side extension table
13. Stock stop
14. Dust extraction adapter
15. Retractable guard
16. Laser
17. Vertical vise
18. Turn table

19. Base
20. Table insert
21. Grip for rotating table
22. Height adjust foot
23. Cutting depth limiter
24. Saw head
25. Shaft lock
26. Stopper arm
27. Mitre angle pointer
28. Mitre scale
29. Bevel angle pointer
30. Bevel scale
31. Switch trigger
32. Center cover
33. Outer flange
34. Inner flange
35. Sliding sub fence
36. Vise rod
37. Vise arm
38. Vise knob

SPECIFICATIONS

Voltage.....230v, 50Hz
Power input.....1500W
No load speed.....5,000min^{-1}
Blade size.....216mm
Max cutting capacities
at 90° x 90°.....62mm x 305mm
at 90° x 45°.....30mm x 305mm
at 45° x 90°.....62mm x 215mm
at 45° x 45°.....30mm x 215mm
Net weight 17kg

STANDARD ACCESSORIES

Dust bag, Wrench

PREPARATION

CAUTION: Always be sure that the tool is switched off and unplugged before carrying out any work on the tool.

BENCH MOUNTING (Fig. 1, 2)

1. When the tool is shipped, the handle is locked in the lowered position by the stopper pin (7). Pull the stopper pin and rotate it 90°, either clockwise or counterclockwise.
2. Alternatively, the tool can be bolted with four bolts (not provided) to a level and stable surface using the bolt holes provided in the tool's base. This will help prevent tipping and possible injury.

CAUTION: Always be sure that the tool is switched off and unplugged before adjusting or checking the tool's function.

BLADE GUARD (Fig. 3, 4)

When lowering the handle, the blade guard (26) rises automatically. The blade guard returns to its original position when the cut is completed and the handle is raised. **NEVER ALTER OR REMOVE THE BLADE GUARD OR THE SPRING ATTACHED TO THE GUARD.**

WARNING: for your personal safety, always maintain the blade guard in good condition. Any irregularities in the blade guard should be corrected immediately. Check the spring loaded return action of the guard. NEVER USE THE TOOL IF THE BLADE GUARD OR SPRING IS DAMAGED, FAULTY OR REMOVED. DOING SO IS HIGHLY DANGEROUS AND CAN CAUSE SERIOUS PERSONAL INJURY.

If the transparent blade guard becomes dirty, or sawdust adheres to it in such a way that the blade and/or workpiece are no longer easily visible, unplug the saw and clean the guard carefully with a damp cloth. Do not use solvents or any petroleum-based cleaners on the plastic guard.

If the blade guard is especially dirty and vision through the guard is impaired, use a star-head screwdriver to loosen the bolt holding the center cover. Loosen the bolt by turning it counterclockwise and raise the blade guard and center cover.

With the blade guard so positioned, cleaning can be more completely and efficiently accomplished. When cleaning is complete, reverse procedure above and secure bolt. Do not remove spring holding blade guard. If guard becomes discoloured through age or UV light exposure, contact a service center for a new guard. DO NOT ALTER OR REMOVE GUARD.

MAINTAINING MAXIMUM CUTTING CAPACITY (Fig. 5, 6)

CAUTION: Always be sure that the tool is switched off and unplugged before carrying out any adjustment on the tool.

Your mitre saw is factory adjusted to provide the maximum cutting capacity for 220mm saw blade. When installing a new blade, always check the lower limit portion of the blade and if necessary, adjust it as follows:

Push the carriage toward the guide fence (9) fully and lower the handle completely.

Use the hex wrench to turn the adjusting bolt until the periphery of the turn table (18) at the point where the top surface of the turn table.

With the tool unplugged, rotate the blade by hand while holding the handle all the way down to be sure that he blade does not contact any part of the lower base. Re-adjust slightly, if necessary.

CAUTION: After installing a new blade, always be sure that the blade does not contact any part of the lower base when the handle is lowered completely. Always do this with the tool unplugged.

ADJUSTING THE STOPPER ARM (Fig. 7)

The lower limit of the blade can be easily adjusted with the stopper arm (26). Move the stopper arm in the direction of the arrow.

A: for full cutting

B: for dad cutting

Then, adjust the adjusting screw so that the blade stops at the desired position when lowering the handle fully.

ADJUSTING THE MITRE ANGLE (Fig. 8)

Loosen the grip (3) by turning counterclockwise. When you have moved the grip to the position where the pointer (27) points to the desired angle on the mitre scale (28), tighten the grip clockwise.

The height adjust foot (22) is to help keeping the tool in balance. After each mitre angle adjustment, you should turn knob on the foot clockwise or counterclockwise until its bottom touches the ground.

CAUTION:

- **When turning the turn base, be sure to raise the handle fully.**
- **After changing the mitre angle, always secure the turn base by tightening the grip firmly.**

ADJUSTING THE BEVEL ANGLE (Fig. 9, 10)

1. When tilting the carriage to the left, loosen the saw head tilt lock lever (10) counterclockwise. Unlock the arm by pushing the handle somewhat strongly in the direction that you intend to tilt the saw blade.
2. Tilt the saw blade until the bevel angle pointer (29) points to the desired angle on the bevel scale (30). Then tighten the lever (10) clockwise firmly to secure the arm.

WARNING:
- **When tilting the saw blade, be sure to raise the handle fully.**
- **After changing the bevel angle, always secure the arm by tightening the lever clockwise.**

SLIDE LOCK ADJUSTMENT (Fig. 11)
To unlock and lock the slide pole, turn the track arm lock knob (6) counterclockwise or clockwise.

SWITCH ACTION (Fig. 12)
CAUTION: Before plugging in the tool, always check to see that the switch trigger actuates properly and returns to the "OFF" position when released
To start the tool, press the switch trigger (31). Release the switch trigger to stop.
A hole is provided in the switch trigger for insertion of a padlock to lock the tool off.

WARNING: NEVER use tool without a fully operative switch trigger. Any tool with an inoperative switch is HIGHLY DANGEROUS and must be repaired before further usage.

LASER GUIDE (Fig. 13)
This tool is equipped with a Laser guide, which is a battery-powered laser cutting guide.
The laser guide allows the operator to anticipate the path of the saw blade on the workpiece before beginning cutting.
WARNING: The laser beam is emitted when the laser line is turned on. Do not stare into the beam or view it directly using optical instruments. Do not remove the warning label that is affixed to the laser cover. Avoid aiming the laser beam directly into the eyes.

CAUTION:
- **Use of controls or adjustments or performance of procedures other than those specified herein may result in hazardous radiation exposure.**
- **The use of optical instruments with this product will increase eye hazard.**
- **Do not stare into the beam or view it directly using optical instruments.**
- **Maximum output: <1mW Wavelength: 650nm Protection Class: II**

Before shifting the laser line or performing maintenance adjustment, be sure to unplug the tool. To turn on the laser beam, press the upper position (I) of the switch. Press the lower position (O) to turn off.
Laser line is factory adjusted so that it is positioned 1 mm from the side surface of the blade (cutting position).

CLEANING THE LENS FOR THE LASER LIGHT
If the lens for the laser light becomes dirty, or sawdust adheres to it in such a way that the laser line is no longer easily visible, unplug the saw and clean the lens for the laser light carefully with a damp, soft cloth.
Do not use solvents or any petroleum-based cleaners on the lens.
NOTE:
- When laser line is a dim and almost or entirely invisible because of the direct sunlight in the indoor or outdoor window near your work area, relocate the work area to a place not exposed to direct sunlight.
- All of the adjustments for the operation of this machine have been carried out at the factory.

CAUTION:
- Use of controls or adjustments or performance of procedures other than those specified herein may result in hazardous radiation exposure.
- The use of optical instruments with this product will increase eye hazard.
- Do not attempt to repair or disassemble the laser. If unqualified persons attempt to repair this laser product, serious injury may result. Any repair required on this laser product should be performed by authorized service center personnel.

INSTALLING OR REMOVING SAW BLADE (Fig. 14, 15, 16)
CAUTION: Always be sure that the tool is switched off and unplugged before installing or removing the blade.
Use only the wrench provided to install or remove the blade. Failure to do so may result in overtightening or insufficient tightening of the screw. This could cause an injury.

REMOVING SAW BLADE (Fig. 14, 15)
1. Use cross screwdriver to loosen the screw holding the center cover by turning it counterclockwise and loosen the screw counterclockwise, but don't remove it.
2. Turn the center cover (32) counterclockwise and raise the blade guard. Press the shaft lock (25) to lock the spindle and use the wrench to loosen the screw clockwise. Then remove the screw, outer flange (33) and blade.

NOTE: When inner flange (34) is removed mistakenly, be sure to install it on the spindle with its flat surface facing the motor.

INSTALLING BLADE (Fig. 16)
1. Mount it carefully onto the spindle, making sure that the direction of the arrow on the surface of the blade matches the direction of the arrow on the blade case.
2. Install the outer flange and screw, and then use the wrench to tighten the screw securely counterclockwise while pressing the shaft lock.

DUST BAG (Fig. 17)
To attach the dust bag (5), fit it onto the dust extraction adapter (14).
When the dust bag is about half full, remove the dust bag from the tool and empty it.
NOTE: If you connect a vacuum cleaner to your saw, more efficient and cleaner operations can be performed.

SECURING WORKPIECE (Fig. 18)
WARNING: It is extremely important to always secure the workpiece properly and tightly using a vice. Failure to do so can cause the tool to be damaged and /or the workpiece to be destroyed. PERSONAL INJURY MAY ALSO RESULT. After a cutting operation DO NOT raise the blade until the blade has come to a complete stop.
When cutting a long workpiece, use supports that are as high as the top surface level of the turn table.
CAUTION: Do not rely solely on the vertical vise to secure the work piece. Thin material tends to sag. Support workpiece over its entire length to avoid blade pinch and possible kickback.

SLIDING SUB FENCE ADJUSTMENT (LEFT) (Fig. 19, 20, 21)

Before left bevel-cutting, make sure that no part of the tool contacts the sliding sub fence (35) when lowering and raising the handle fully at any position ad pulling or pushing the carriage all the way at the lowest position. Before operating the tool, make sure that the sliding fence is secured by the clamping screw firmly.

WARNING:

- **When performing left bevel cuts, slide the sliding fence to the left and secure it as shown in the figure (Fig.20). Otherwise, it will contact the blade or a part of the tool, causing possible serious injury to the operator.**
- **This tool is equipped with the sliding fence which should ordinarily be positioned as shown in the figure (Fig.19). However when performing left bevel cuts, set it to the left position as shown in the (Fig.20) if the tool head contacts it. When bevel-cutting operations are complete, don't forget to return the sliding fence to the original position (Fig.19) and secured it by firmly tightening the knob.**

VERTICAL VISE (Fig. 22)

The vertical vise can be installed on wither the left or right side of the guide fence. Insert the vise rod (36) into the hole in the guide fence.

1. Position the vice arm according to the thickness and shape of the work piece and secure the vise arm (37) by tightening the screw. If the vise arm contacts the guide fence or sub-fence, adjust the vise arm to the upper position.
2. Make sure that no part of the tool contacts the vise when lowering the handle fully and pulling or pushing the carriage all the way. If some part contacts the vise, re-position the vise.
3. Press the workpiece flat against the guide fence and the turn base. Position the workpiece at the desired cutting position and secure it firmly by tightening the vise knob (38).

CAUTION: The workpiece must be secured firmly against the turn base and guide fence with the vise during all operations.

EXTENTIONS TABLE (Fig. 23)

Unlock the knobs on the base (19). Slide the left extension table (12) to the desired table width and stop the extension table by locking the knobs.

Slide the right extension table by the same amount as above.

STOCK STOP (Fig. 23-1)

When you want to cut the workpiece as same length size constantly, you can use the stock stop device to guarantee it.

Make sure the stock stop (13) on the left and right extension table can be swung up as the illustrated.

CAUTION: Before use, be sure to release the handle from the lowered position by pulling the stopper pin. Make sure the blade is not contacting the workpiece before the switch is turned on. Do not apply excessive pressure on the handle when cutting. Too much force may result in the motor overloading and/or decreased cutting efficiency. Push down handle with only as much force as it necessary for smooth cutting, without a significant decrease in blade speed. Gently press down the handle to perform the cut. If the handle is pressed down with force or if lateral force is applied, the blade will vibrate and leave mark (saw mark) in the workpiece and the precision of the cut will be impaired.

OPERATION

PRESS CUTTING (CUTTING SMALL WORKPIECES) (Fig. 24)

For workpieces up to 60mm high and 60 mm wide

1. Push the carriage toward the guide fence fully and tighten the track arm lock knob (6) clockwise to secure the carriage, and secure the workpiece with the vise.
2. Switch on the tool without the blade making any contact and wait until the blade attains full speed before lowering. Then gently lower the handle to the fully lowered position to cut the workpiece.
3. When the cut is completed, switch off the tool and WAIT UNTIL THE BLADE HAS COME TO A COMPLETE STOP before returning the blade to its fully elevated position.

CAUTION: Firmly tighten the locking screw clockwise so that the carriage will not move during operation. Insufficient tightening may cause unexpected kickback of the blade. Possible SERIOUS PERSONAL INJURY may result.

SLIDE CUTTING (Fig. 25)

For cutting wide workpieces

1. Loosen the track arm lock knob counterclockwise so that the carriage can slide freely, and secure the workpiece with the vise.
2. Pull the carriage toward you fully. Switch on the tool without the blade making any contact and wait until the blade get up to full speed.
3. Press down the handle (1) and PUSH THE CARRIAGE TOWARD THE GUIDE FENCE AND THROUGH THE WORKPIECE.
4. When the cut is completed, switch off the tool and WAIT UNTIL THE BLADE HAS COME TO A COMPETE STOP before returning the blade to its fully elevated position

CAUTION: When performing a slide cut, PULL THE CARRIAGE TOWARD YOU FULLY and press down the handle to the fully lowered position, then PUSH THE CARRIAGE TOWARD THE GUIDE FENCE. NEVER START THE CUT WITH THE CARRIAGE NOT FULLY PULLED slide cut towards you, the blade may kickback unexpectedly with the potential to cause SERIOUS PERSONAL INJURY.

Never perform the slide cut with the handle locked in the lowered position by pressing the stopper pin.

MITRE CUTTING (Fig. 26)

Loosen the grip by turning counterclockwise. When you have moved the grip to the position where the mitre angle pointer points to the desired angle on the mitre scale, securely tighten the grip clockwise.

CAUTION: When turning the turn base, be sure to raise the handle fully. After changing the mitre angle, always secure the turn base by tightening the grip firmly.

BEVEL CUTTING (Fig. 27)

Loosen the saw head tilt lock lever and tilt the saw blade to set the bevel angle (refer to the previously covered "adjusting the bevel angle"). Be sure to retighten the saw head tilt lock lever firmly to secure the selected bevel angle safely. Secure the workpiece with a vise. Make sure the carriage is pulled all the way back toward the operator fully. Switch on the tool without the blade making any contact and wait until the blade attains full speed. Then gently lower the handle to the fully lowered position while applying pressure in parallel with the blade and PUSH THE CARRIAGE TOWARD THE GUIDE FENCE TO CUT THE WORKPIECE. When the cut is completed, switch off the tool and WAIT UNTIL THE BLADE HAS COME TO A COMPLETES STOP before returning the blade to its fully elevated position.

CAUTION: Always be sure that the blade will move down to bevel direction during a bevel cut. Keep your hands out of path of the saw blade. During a bevel cut, it may create a condition whereby the piece cut off will come to rest against the side of the blade. If the blade is raised while the

blade is still rotating, this piece may be caught by the blade, causing fragments to be scattered, which is dangerous. the blade should be raised ONLY after the blade has come to a complete stop.

When pressing down the handle, apply pressure in parallel with the blade. If a force is applied perpendicularly to the turn base or if the pressure direction is changed during a cut, the precision of the cut will be diminished. Always slide or remove the sliding fence (left) so that it does not interfere with any part of the carriage when performing bevel cuts.

COMPOUND CUTTING (Fig. 28)

Compound cutting is the process in which a bevel angle is made at the same time in which a mitre angle is being cut on a workpiece.

Compound cutting can be performed at the angles as below.

- Mitre angle: Left and Right $0^0 \sim 45^0$
- Bevel angle: Left $0^0 \sim 45^0$

When performing compound cutting, refer to the "Press cutting", "Slide cutting", "Mitre cutting" and "Bevel cutting" sections.

GROOVE CUTTING (Fig. 29)

For dado type cut

1. Adjust the lower limit position of the blade using the adjusting screw and stopper arm to limit the cutting depth of the blade. Refer to the "Stopper arm" section described previously.
2. After adjusting the lower limit position of the blade, cut parallel grooves across the width of the workpiece using a slide (push) cut as shown in the figure. Then remove the workpiece material between the grooves with a chisel.

Do not attempt to perform this type of cut using wide (thick) blades or with a dado blade. Possible loss of control and injury may result.

CAUTION: Be sure to return the stopper arm to the original position when performing an operation other than groove cutting.

CARRYING THE TOOL (Fig. 30)

Make sure that the tool is unplugged. Secure the blade at the 0^0 bevel angle and turn base to the right mire angle fully. Lower the handle fully and lock it in the lowered position by pushing in the stopper pin. Carry the tool by holding the base as shown in the figure. If you remove the vise, dust bag,etc., you can carry the tool more easily.

Carry the tool by one hand holding the carrying handle and the other hand holding tool base.

CAUTION: Always secure all moving portions before carrying the tool.

Stopper pin is for carrying and storage purposes only and not for any cutting operations.

MAINTENANCE

CAUTION: Always be sure that the tool is switched off and unplugged before attempting to perform inspection or maintenance.

WARNING: Always be sure that the blade is sharp and clean for the best and safest performance.

NOTICE: Never use gasoline, benzene, thinner, alcohol, or similar substances. Discoloration, deformation or cracks may result.

ADJUSTING THE CUTTING ANGLE

This tool is carefully adjusted and aligned at the factory, but rough handing may have affected the alignment. If your tool is not aligned properly, perform the following:

MITRE ANGLE (Fig. 31, 32, 33)

1. Push the carriage toward the guide fence and tighten the locking screw to secure the carriage. Loosen the secures the turn base. Turn the turn base so that the pointer points to 0^0 on the mitre scale. Then turn the turn base slightly clockwise and counterclockwise to seat the turn base in the 0 mitre notch. (Fig. 31)
2. Lower the handle fully and lock it in to the lowered pushing in the stopper pin. Square the side of the the face of the guide fence using a triangular rule, etc. (Fig. 32)
3. Make sure that the pointer points to 0^0 on the mitre scale. If the pointer does not point to 0^0, loosen the screw which secures the pointer and adjust the pointer so that it will point to 0 33)

BEVEL ANGLE

(A) 0^0 bevel angle (Fig. 34, 35, 36)

1. Push the carriage toward the guide fence and tighten the track arm lock knob to secure the carriage. Lower the handle and lock it in the lowered position by pushing in the stopper pin, and loosen the saw head tilt lock lever at the rear of the tool.
2. Carefully square the side of the blade with the top the turn table using a triangular rule, tri-square, etc. hex bolt on the arm slightly counterclockwise or clockwise to tilt the blade to the right position. Then tighten the saw head tilt lock lever securely.
3. Make sure that the bevel angle pointer on the arm points to 0 on the bevel scale on the arm holder. If they do not point to 0 loosen the screw which secures the bevel angle pointer and adjust it so that it will point to 0^0.

(B) 45^0 bevel angle (Fig. 37, 37-1)

Adjust the 45^0 bevel angle only after performing 0^0 bevel angle adjustment.

1. Loosen the saw head tilt lock lever and tilt the blade fully.
2. Carefully measure the angle of the side of the blade with the top surface of the turn table using the 45^0 triangular rule. Turn the left 45^0 bevel angle adjusting bolt on the arm slightly counterclockwise or clockwise to tilt the blade to the right position. Then tighten the saw head tilt lock lever tightly.
3. Make sure that the bevel angle pointer on the arm points to 45^0. If the pointer does not point to 45^0, adjust the pointer to 45^0 on the bevel scale by loosing the screw, and then tighten the screw.

CARBON BRUSH (Fig. 38, 39)

Remove and check the carbon brushes regularly.

Replace the carbon brush when it is worn out.

Keep the carbon brushes clean and free to slip in the holders. Both carbon brushes should be replaced at the same time. Use only identical carbon brushes sold by RYOBI service center or dealer.

1. Use a screwdriver to remove the carbon brush holder caps (3).
2. Take out the worn carbon brushes, insert the new ones and secure the brush holder caps.

AFTER USER

Wipe off chips and dust adhering to the tool with a cloth or the like. Keep the blade guard clean according to the directions in the previously covered section entitled "Blade guard".

Lubricate the sliding portions with machine oil to prevent

When storing the tool, pull the carriage toward you fully.

Parts Breakdown

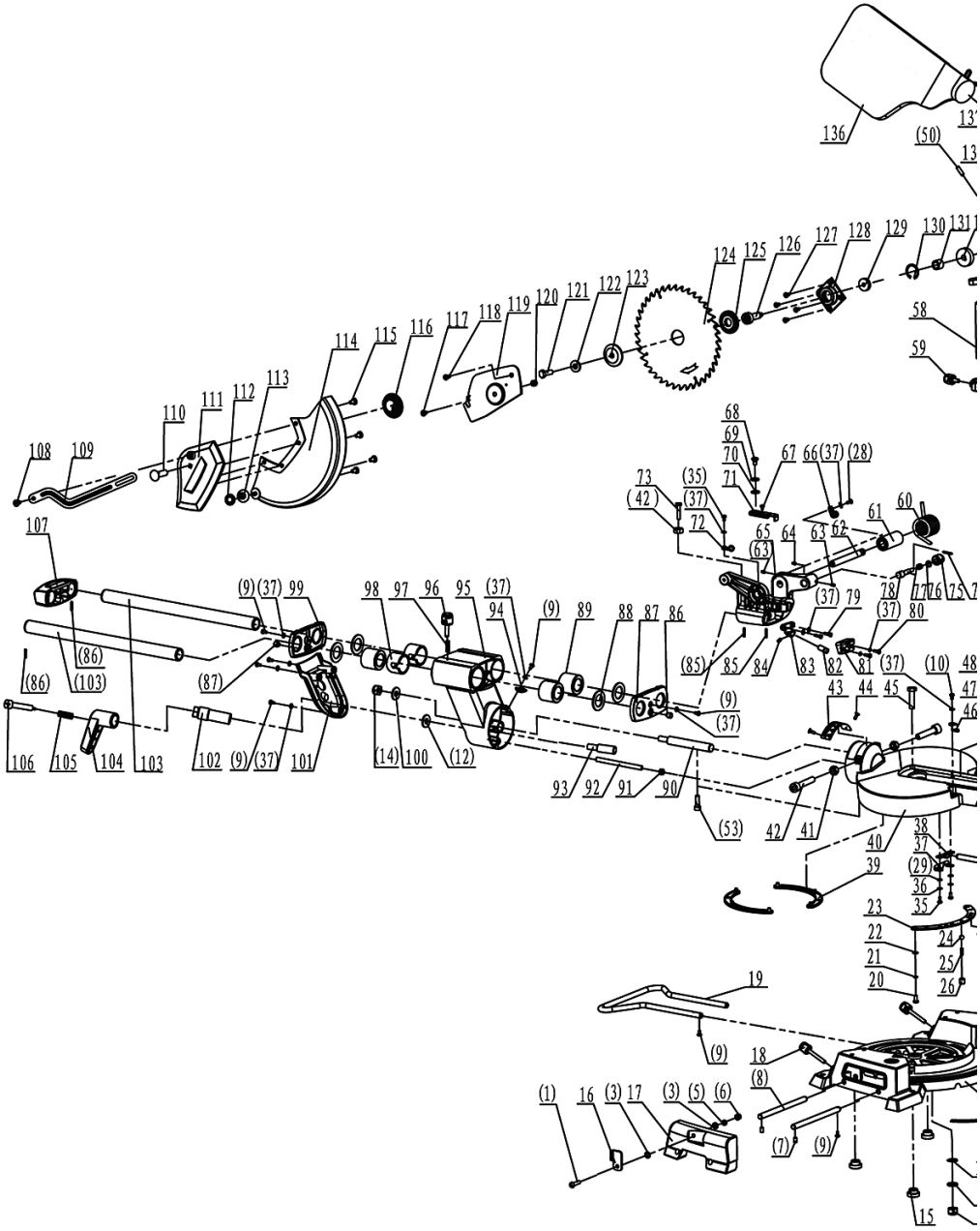

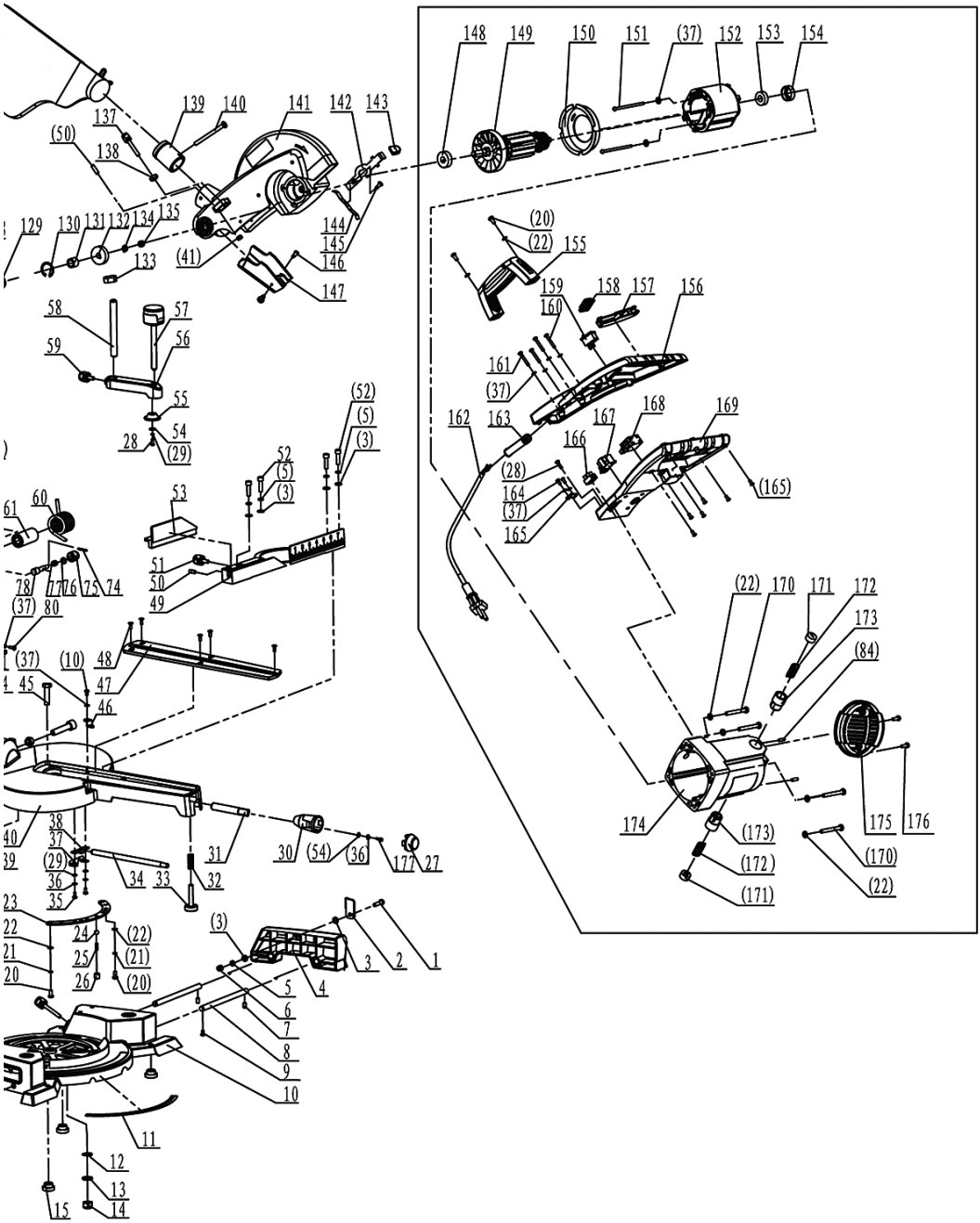
148 149 150 151 (37) 152 153 154
(20) (22) 155
159 158 157 156 160
161 (37)
162 163 167 168 169
166
(28) 164 (37) 165 (165)
(22) 170 171 172 173 (84)
174 175 176
(173) (172) (171) (170) (22)
139 140 141 142 143
137 (50) 138
129 130 131 132 134 135 133 (41) 144 145 146 147
58 57 56 59 55 28 54 (29)
(52) (5) (3)
52 (5) (3) 53
61 60 78 77 76 75 74 (37) 80 51 50 49
(37) (10) 48 47 46 45
40 39 38 37 (29) 36 35 34 33 32 31 30 (54) 36 177 27
23 22 21 20 24 25 26 (22) (21) (20)
(3) 3 2 1 5 4 6 7 8 9 10
11 12 13 14 15

Parts List

No	Description	Qty
1	Cross recess head screw	2
2	Stock plate (right)	1
3	Flat washer	8
4	Right extension table	1
5	Spring washer	6
6	Checknut	2
7	Hexagon socket head screw	4
8	Extension bar	4
9	Cross recess head screw	10
10	Base	1
11	Workbench label	1
12	Saddle washer	1
13	Flat washer	2
14	Checknut	2
15	Foot pad	4
16	Stock plate (left)	1
17	Left extension table	1
18	Locking knob (B)	2
19	Balance bracket	1
20	Cross recess head screw	4
21	Spring washer	2
22	Flat washer	8
23	31.6°fixing plate	1
24	Steel ball	1
25	Column compression spring	1
26	Hexagon socket set screws	1
27	Grid covering	1
28	Cross recess head screw	1
29	Flat washer	20
30	Operation Handle	1
31	Handle lever	1
32	Column compression spring	1
33	Adjusting screw rod	1
34	Ejector rod	1
35	Cross recess head screw	2
36	Spring washer	3
37	Locking sheet	1
38	Clamp plate	1
39	Friction washer	2
40	Work table	1
41	Bolt	4
42	Hexagon socket head cap head screw	2
43	Angle label	1
44	Label rivet	2
45	Hex bolt	1
46	Pointer	1
47	Table insert	1
48	Cross recess head countersunk screw	5
49	Fence	1
50	Hexagon socket head bolt	2

No	Description	Qty
51	Locking knob (C)	1
52	Hexagon socket head cap head bolt	5
53	Auxiliary fence	1
54	Big flat washer	2
55	Clamp plate	1
56	Linkage pole	1
57	Locking knob	1
58	Transfer shaft	1
59	Locking knob (a)	1
60	Torsional spring	1
61	Bush	1
62	Rotating shaft	1
63	Hexagon socket head bolt	2
64	Hexagon socket flat head bolt	1
65	Support	1
66	Tension card	1
67	Fixing pin	1
68	Baffle bolt	1
69	Spring washer in wave shape	1
70	Flat washer	1
71	Movable plate	1
72	Holder-wire	1
73	Bolt in cup head and square neck	1
74	Spring column pin	1
75	Knob	1
76	Pin washer	1
77	Pin spring	1
78	Pin	1
79	Hexagon socket head cap head bolt	2
80	Cross recess head bolt	2
81	Laser covering	1
82	Laser	1

The **Axminster guarantee** is available on Hobby, Trade, Industrial, Engineer, Air Tool & Axcnc Technology Series machines

It's probably the most comprehensive FREE guarantee ever- buy with confidence from Axminster!
So sure are we of the quality, we cover all parts and labour free of charge for three years!

- **Look for the icon and put your trust in Axminster**
- **No registration necessary - just keep your proof of purchase**
- **Optional Service Plan for Industrial Series machinery**

AXMINSTER Hobby SERIES
Great value & easy-to-use, perfect for use at home

AXMINSTER Trade SERIES
Solid, reliable machines designed for daily use

AXMINSTER INDUSTRIAL SERIES
Top performers with class leading features and build quality for use in busy workshops

AXMINSTER Engineer SERIES
Quality, precision machines for the workshop or education

AXMINSTER Model Engineer SERIES
Small machines for the home engineer

AXMINSTER TOOLS air
Compressors and tools for home or workshop use; durable and great value

Axcnc Technology
Precision CNC machines for industry and education

Free Three Year Guarantee on Axminster Hobby, Trade and Industrial Series woodworking and engineering machines, Axminster Air compressors and Air Tools, and bench top grinders - no registration necessary just proof of purchase.

We will repair or replace at our discretion and will collect only from a UK mainland address, irrespective of the original delivery address.

The Guarantee assumes that you have bought the correct machine for the required operation, in accordance with our guidelines; have operated and maintained it in accordance with the instruction manual; and that all cutting machines will be used with a blade which is sharp and serviceable at all times. It does not cover consumable items purchased with the original product, including original blades or abrasives.

Normal wear and tear; misuse, abuse and neglect are excluded and the machine should not have been modified in any way. Please do not attempt to service the product without first contacting us; we are happy to guide you but failure to do so may invalidate the guarantee.

The Guarantee is transferable from owner to owner in the first three years but you must have original proof of purchase. Should we need to replace a machine in the first three years the guarantee will still continue to be effective from the original purchase date.

Full Terms and Conditions can be found at **axminster.co.uk/terms**
This guarantee does not affect your statutory rights.

For more information visit **axminster.co.uk/3years**

Please dispose of packaging for the product in a responsible manner. It is suitable for recycling. Help to protect the environment, take the packaging to the local recycling centre and place into the appropriate recycling bin.

Only for EU countries

Do not dispose of electric tools together with household waste material. In observance of European Directive 2002/96/EC on waste electrical and electronic equipment and its implementation in accordance with national law, electric tools that have reached the end of their life must be collected separately and returned to an environmentally compatible recycling facility.

Axminster Tools & Machinery Ltd
Weycroft Avenue, Axminster, Devon EX13 5PH

axminster.co.uk