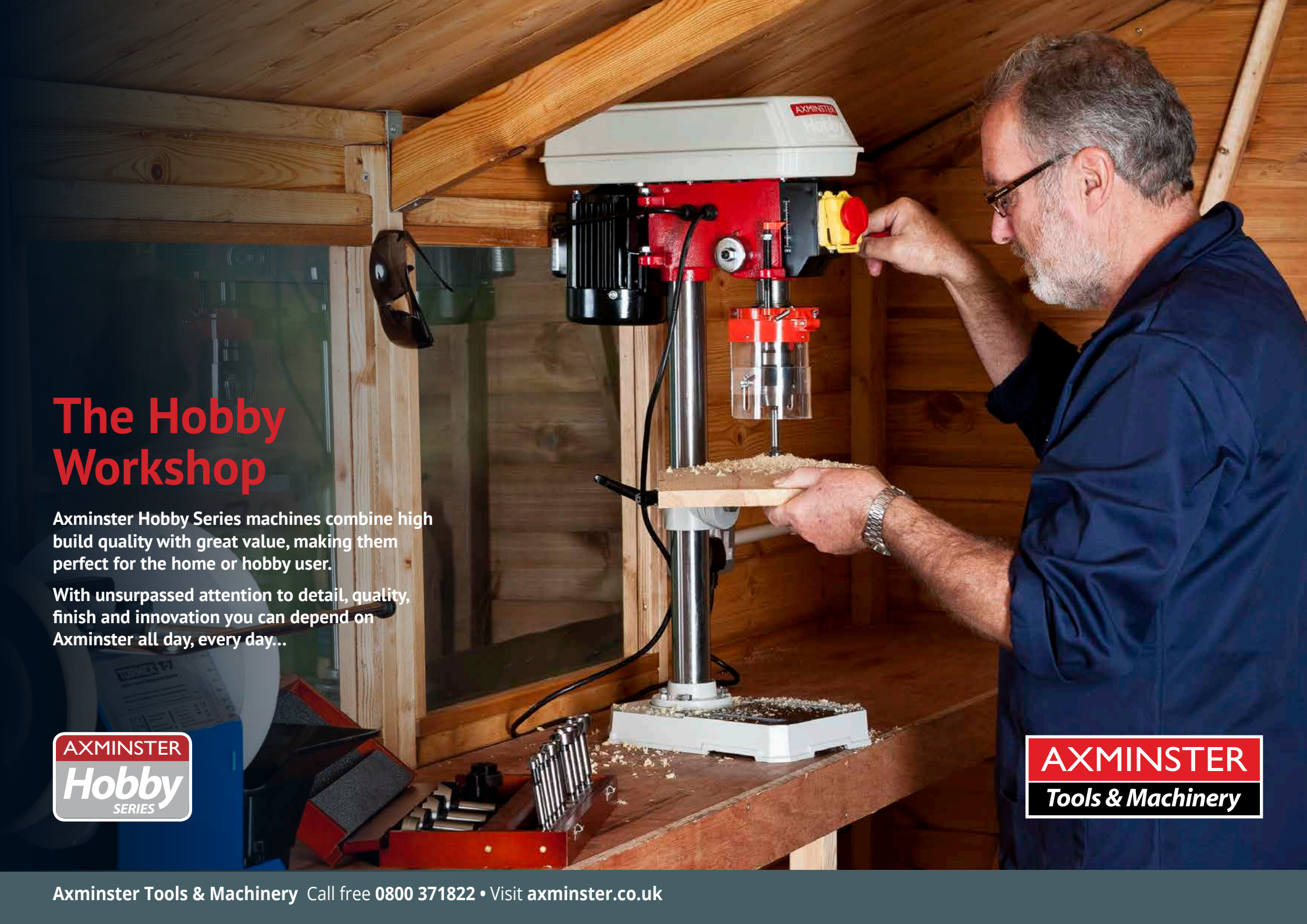

The Hobby Workshop

Axminster Hobby Series machines combine high build quality with great value, making them perfect for the home or hobby user.

With unsurpassed attention to detail, quality, finish and innovation you can depend on Axminster all day, every day...

AXMINSTER Hobby SERIES

AXMINSTER Tools & Machinery

Axminster Hobby **Series**

Axminster have been selling woodworking machinery for over 40 years, so you can rely on our experience for having selected the very best manufacturers to work with so that we and, most importantly, you can be certain of their reliability, availability and serviceability.

When you buy an Axminster machine you can be assured of:

- Quality build and finish using the finest materials
- Innovative features and unique design
- Guaranteed accuracy and precision
- High quality motors with maximum power efficiencies
- Machines incorporate CNC quality motors and control gear for maximum torque
- Supplied, where applicable, with high quality Axminster accessories

Buy with confidence from Axminster....

All Axminster machines come with a FREE 3 Year guarantee

It's probably the most comprehensive free guarantee ever!

So sure are we of the quality of our machines, we cover all parts and labour free of charge for three years

No registration necessary – just keep your proof of purchase

Full terms and conditions can be found at axminster.co.uk/terms

Skill Centre Courses

Get more out of your machine - learn with experts

Wide range of 1, 2 and 5 day courses available

For up-to-date course information and availability

axminsterskillcentre.co.uk

Our machines are displayed throughout our stores.

The Trafalgar Way, **Axminster**, Devon EX13 5SN **Tel: 01297 35058**
Winchester Road, **Basingstoke**, Hampshire RG22 6HN **Tel: 01256 637477**
Valegate Retail Park, Copthorne Way, **Cardiff** CF5 6EH **Tel: 02920 025000**
Lincoln Road, Cressex Business Park, **High Wycombe**, Buckinghamshire HP12 3FF **Tel: 01494 885480**
North Shields Retail Park, Norham Road, **North Shields**. NE29 7UJ **Tel: 01915 005966**
Hamilton Way, Bermuda Trade Park, **Nuneaton**, Warwickshire CV10 7RA **Tel: 02476 011402**
Sheppey Way, Bobbing, **Sittingbourne**, Kent ME9 8QP **Tel: 01795 437143**
Gateway 49 Trade Park, Kerfoot Street, **Warrington**, Cheshire WA2 8NT **Tel: 01925 595888**

Buy with confidence from Axminster with the FREE 3 Year Guarantee – available on all Hobby Series machines

BTS10ST Table Saw

code: 501241

This is an extremely compact table saw for the hobbyist, designed for maximum mobility and the minimum amount of storage space.

Built around a welded steel box section frame, it has a pair of sturdy wheels and a telescopic handle to allow the saw to be easily moved around the workshop. The saw can also be stored vertically to save storage space and it has a folding steel stand which is easy to erect. The saw table is extruded aluminium and has a useful 645 x 140mm sliding table with 695mm of travel, which is useful when mitres are cut. The rip fence has two support rails and a clever flip-over function so that it can act either as a fence or wide board support rail. It's powered by a 1,800W braked brush motor and will easily cut to its 90mm maximum cutting depth. Two dust extraction ports ensure that sawdust is removed when connected to a suitable vacuum extractor. The tools as well as the power lead are stored conveniently and all the controls are grouped together for ease of use.

This saw can be used anywhere, without the need to have a dedicated space in the workshop and is supplied with a 36T general purpose saw blade.

SPECIFICATIONS

Power	1,800W (230V, 1ph)
Blade Dia/Bore	254mm 30mm
Blade Tilt	0-45°
Max Depth of Cut @ 45°	65mm
Max Depth of Cut @ 90°	90mm
Max Ripping Width	640mm
Table Size	640 x 495mm inc Sliding Table
Table Height	940mm
Dust Extraction Outlet	65mm + 37mm
Min Extraction Airflow Required	500m³/hr
Overall L x W x H	770 x 920 x 1,140mm
Weight	25kg

AXCALIBER CONTRACT TCT SAW BLADES

- Great quality blades
- Anti vibration slots for smooth running
- Micro brazed TCT tips ground to a razor sharp edge
- Incorporates ATB or TCG
- See page 31 for more information

254mm Diameter Blades	Code
Rip (24 Teeth) ATB	501035
Combination (40 Teeth) ATB	501036
Fine Cross Cut (80 Teeth) TCG	501038

AXMINSTER RECOMMENDS

The AWDE5002 Dust Extractor is ideal for use with this table saw

See page 25 for more details

TS-200-2 Sliding table (501254)

TS-200-2 (saw only) (508310)

TS-200-2 Table Saw

code: 508310

A well made, small table saw and ideal for use at home. Unusually, it's powered by a smooth running, high torque, 1,100W induction motor which is also extremely quiet.

A robust, cast iron table with a finely ground surface is fitted offering stability and accuracy. The 205mm TCT blade has a maximum cutting depth of 60mm, which is enough for most small furniture or garden projects. The controls are easy to operate, allowing the blade height and tilt to be set quickly and accurately. A full width fence is fitted together with a sub fence which can be used for for larger ripping or crosscut tasks, as well as being able to be re-positioned for smaller work.

The basic table saw can be bench mounted and is supplied with a rip fence, mitre fence together with dust extraction hoses. Owing to the small hose diameters, a vacuum extractor works best with this machine and it's supplied with a 32 tooth Axcaliber TCT general purpose blade.

There's a selection of optional extras: a leg stand, right hand extension table kit and also a comprehensive cast iron sliding table, complete with a large mitre fence and work clamp. On it's own or with the accessories, the TS-200 is an accurate, smooth saw and is ideal for small furniture projects in the hobbyist's workshop.

There is also a complete kit version that includes all of the above at a moderate cost saving.

SPECIFICATIONS

Power	1.1kW 230V, 1ph
Blade Dia/Bore	205mm 30mm
Blade Tilt	0° to 45°
Max Depth of Cut @ 45°	40mm
Max Depth of Cut @ 90°	60mm
Max Crosscut	620mm
Max Width of Cut with Fence	190mm standard, 750mm with R/H Table Kit
Table Size	675 x 400mm
Table Height	320mm
Dust Extraction Outlet	100mm
Min Extraction Airflow Required	500m³/hr
Overall L x W x H	800 x 400 x470mm
Weight	55kg

AXCALIBER CONTRACT TCT SAW BLADES

- Great quality blades
- Anti vibration slots for smooth running
- Micro brazed TCT tips ground to a razor sharp edge
- Incorporates ATB or TCG, see page 31

200mm Diameter Blades	Code
General Purpose (32 teeth)	610498
Cross Cut (48 teeth)	610499
Extra Fine (64 teeth)	210660

AXMINSTER RECOMMENDS

The AWDE5002 Dust Extractor is ideal for use with this table saw

See page 25 for more details

Buy with confidence from Axminster with the FREE 3 Year Guarantee – available on all Hobby Series machines

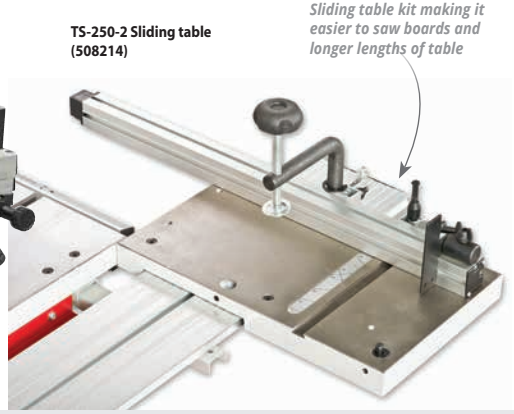

TS-250M-2 Table Saw

code: 508312 (saw only) *code:* 717667 (complete kit)

This table saw is a larger version of the TS-200-2 and shares the same attributes as its smaller cousin of quiet running, powerful performance and compact dimensions.

Fitted with a 250mm 40T TCT Axcaliber blade, the TS-250M-2 has a maximum depth of cut of 76mm, making it a great option for larger home projects. Adequate power is supplied by a 1.5kW, 230V induction motor. Both blade height and tilt controls operate smoothly and are conveniently placed with a simple lock to set the blade tilt. The heavy, cast iron table is ground flat to create a smooth top surface and the full length fence features a sub-fence which can be positioned for rip or crosscut work, or re-set for smaller cutting tasks. The fence can also be set more accurately using a fine width control.

The basic table saw can be bench mounted and is supplied with a rip fence, mitre fence together with dust extraction hoses. Owing to the small hose diameters, a vacuum extractor works best with this machine. The mitre fence can also be used either side of the blade which is very useful when making 45° left or right hand mitre cuts.

There's a selection of optional extras; a leg stand which gives a table height of 880mm, a right hand extension table kit allowing an extra 600mm of width, as well as a sliding table kit with a cast iron carriage, complete with mitre fence, work clamp and a very useful 915mm of travel.

A complete kit version is also available that includes all of the above at a moderate cost saving.

With the ability to add a range of accessories to the TS-250M-2, this may be the only table saw a hobby user requires.

SPECIFICATIONS

Power	1.5kW 230V 1ph
Blade Dia/Bore	250mm 30mm
Blade Tilt	0° to 45°
Max Depth of Cut @ 45˚	60mm
Max Depth of Cut @ 90˚	76mm
Max Width of Cut with Fence	200mm standard 760mm with R/H Table Kit
Table Size	670 x 430mm
Table Height	360mm
Dust Extraction Outlet	100mm
Min Extraction Airflow Required	750m³/hr
Overall L x W x H	920 x 560 x 560mm
Weight	80kg

AXCALIBER CONTRACT TCT SAW BLADES

250mm Diameter Blades	Code
Cross Cut (60 teeth) ATB	800069
Extra Fine (80 teeth) ATB	800071

AXMINSTER RECOMMENDS

The AWDE5002 Dust Extractor is ideal for use with this table saw

See page 25 for more details

HBS200N Bandsaw

code: 102266

The Axminster Hobby Series HBS200N bandsaw is our smallest model and is designed to be bench mounted.

It features a welded steel chassis with a cast iron table for strength and stability as well as a solid rip fence which locks rigidly. It's a straightforward machine, with a direct drive motor and balanced cast alloy wheels. Blade width capacities range from 6-13mm; it also has copper blade guides and ball bearing thrust guides. These combine to effectively control the blade allowing thin slices of veneer to be cut and the top guide even has a rack and pinion height control. The top wheel is mounted in a welded steel sub frame with blade tensioning and tracking controls conveniently close. A single dust outlet port provides efficient dust removal when connected to a suitable vacuum extractor. The machine is supplied with a 6mm, 6tpi blade made from UK manufactured stock.

This is a really effective little bandsaw and would be superb for the hobby or craft workshop or as an additional machine for smaller work.

SPECIFICATIONS

Rating	**Hobby**
Power	**250W 230V 1ph**
Blade Speed	**800 m/min**
Blade Length	**1,400mm**
Blade Width Min/Max	**6-13mm**
Max Width of Cut	**200mm**
Max Depth of Cut	**80mm**
Max Width of Cut with Fence	**102mm**
Table Size	**300 x 300mm**
Table Tilt	**0-45°**
Table Height	**290mm**
Wheel Diameter	**200mm**
Dust Extraction Outlet	**40mm**
Overall L x W x H	**330 x 270 x 700mm**
Weight	**20kg**

AXCALIBER HIGH CARBON BLADES

- Manufatured in Axminster, using all British materials
- The 'blade of choice' for many users
- Great for all those normal tasks in the workshop where a smooth, good quality cut is required
- See the complete range on page 31

Blade length 1,400mm (55 1/8")	Code
1/2" width x 6tpi	508262
1/4" width x 6 Tpi	508253
1/4" width x 10 Tpi	508254
3/8" width x 10 Tpi	508260

AXMINSTER RECOMMENDS

The UJK Technology Bandsaw Buddy (code 101807) is ideal for use with all hobby bandsaws

Visit ***axminster.co.uk*** for more details

Buy with confidence from Axminster with the FREE 3 Year Guarantee – available on all Hobby Series machines

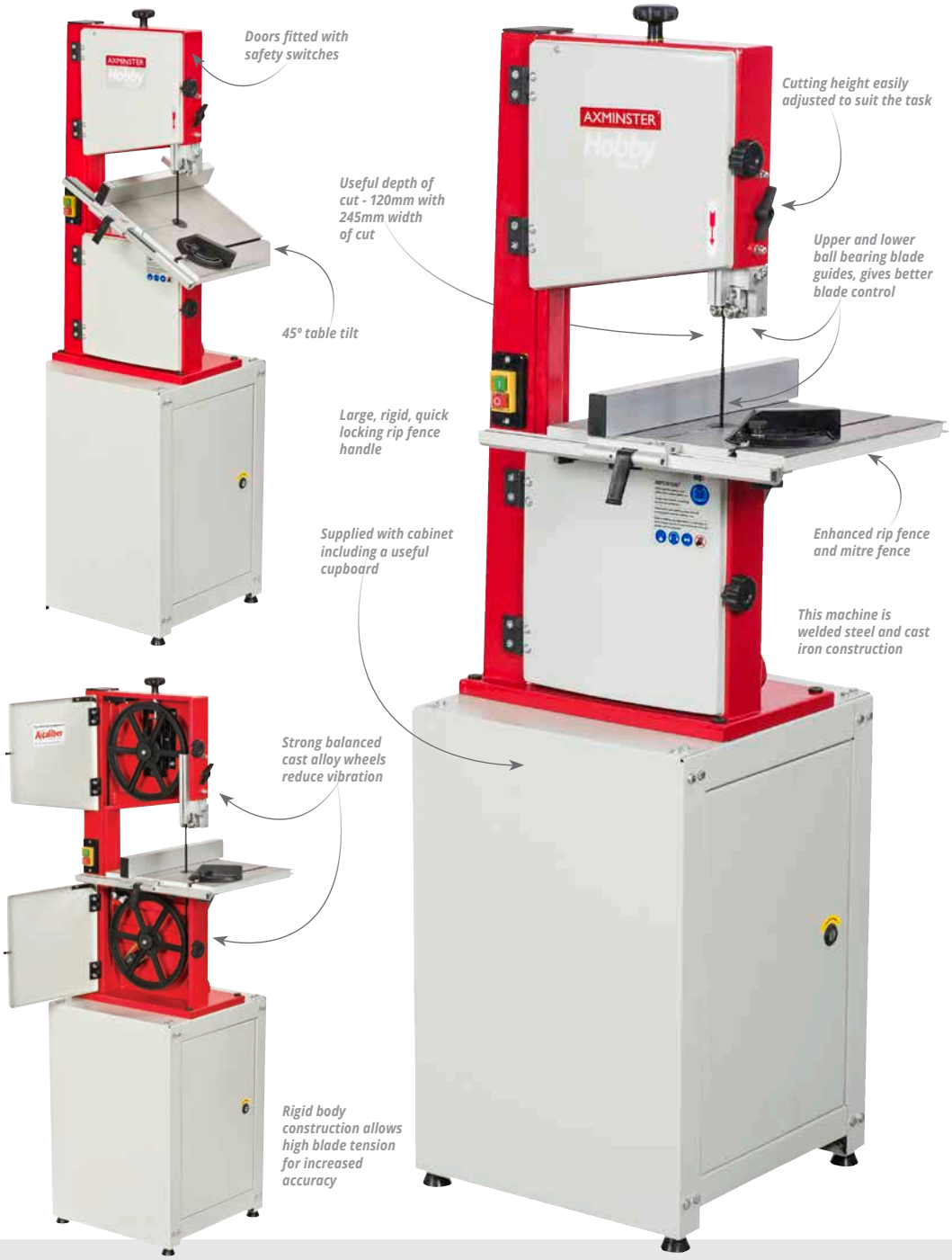

HBS250N Bandsaw

code: 508204

The Axminster Hobby HBS250N bandsaw is a smaller floor standing model with a storage cabinet, rip fence and alloy mitre fence.

The extruded aluminium rip fence is cam locked and supported at the rear by a ball bearing with rails allowing the full cutting width up to the frame. The machine is fabricated from sheet steel with a very rigid tapered back column, as well as a cast iron table and balanced cast alloy wheels; these features are usually only found on much bigger machines. The stiffness of the steel fabrication allows the blade tension to be much higher than most bandsaws of this size helping to reduce the blade vibration and increase accuracy. The blade is well supported with ball bearing guides both above and below the table. Unusually in a bandsaw of this size, the back edge of the blade runs on the face of the rear thrust bearings rather than the side. Both doors are fitted with safety micro switches meaning that the motor will cut out should a door be opened while the machine is in use. As an entry level bandsaw, the HBS 250N is difficult to fault; compact in size yet with surprising capabilities .

The bandsaw is supplied with mitre fence, storage cabinet stand and a UK made Axcaliber blade.

SPECIFICATIONS

Power	370W, 230V, 1ph
Blade Speed	660 & 960 m/min
Blade Length	1,790mm
Blade Width Min/Max	6mm (1/4") to 13mm (1/2")
Max Width of Cut	245mm
Max Depth of Cut	120mm
Max Width of Cut with Fence	220mm
Table Size	340 x 340mm
Table Height on Stand	990mm
Table Tilt	-5° to +45°
Wheel Diameter	250mm
Dust Extraction Outlet	63mm
Overall L x W x H	420 x 410 x 1,500mm
Weight	43.5kg

AXCALIBER HIGH CARBON BLADES

Blade length 1,790mm (70 1/2")	Code
1/2" width x 6tpi	340710
1/4" width x 6tpi	340713
3/8" width x 10tpi	340715
Pack of 5 assorted blades	719613

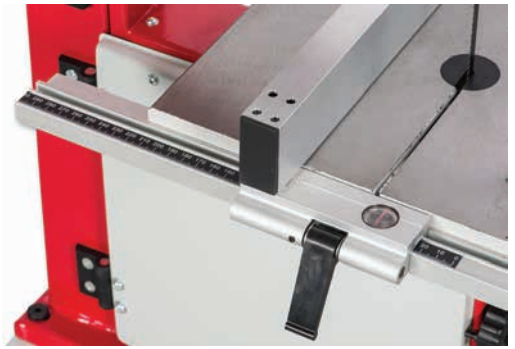

AXMINSTER RECOMMENDS

The Numatic PSP 180-11 Vacuum Extractor (508317) is ideal for use with this bandsaw

Visit ***axminster.co.uk*** for more details

HBS310N Bandsaw

code: 508205

The Axminster Hobby Series HBS310N is a medium sized floor standing bandsaw for general hobby use.

A strong steel fabricated body features a tapered rear column offering greater rigidity. Cutting depth is easily controlled by a handwheel operated rack and pinion with balanced, cast alloy wheels to support the blade. The substantial, ground, cast iron table tilts smoothly up to 45° and is unusually large for a machine of this size. A standard 19mm channel is machined into the table and a close fitting all alloy mitre fence is included. The rip fence slides smoothly on a front aluminium extrusion and has a roller support bearing at the rear running in an alloy channel. The fence can also be turned through 90° when smaller items need to be cut and is locked with a quick action cam lever, securely clamping at both the front and rear. Ball bearing roller blade guides support the blade above and below the table which helps ensure straight cuts with a good finish together with a micro adjustment facility to enable accurate guide adjustment. The powerful 550W induction motor drives the blade through a pulley system giving a choice of two belt speeds. This allows the operator to select the correct speed for the task, saving undue stress on the blade and motor. This excellent bandsaw will satisfy the requirements of many enthusiastic hobby users in the home workshop.

It's supplied with mitre fence, rip fence, leg frame floor stand and a UK made Axcaliber blade.

SPECIFICATIONS

Power	550W 230V 1ph
Blade Speed	360 & 720 m/min
Blade Length	2,270mm
Blade Width Min/Max	6mm (1/4") to 16mm (5/8")
Max Width of Cut	305mm
Max Depth of Cut	180mm
Max Width of Cut with Fence	265mm
Table Size	500 x 400mm
Table Height on Stand	1,005mm
Table Tilt	-5° to +45°
Wheel Diameter	310mm
Dust Extraction Outlet	100mm
Overall L x W x H	760 x 720 x 1,700mm
Weight	80kg

AXMINSTER RECOMMENDS

The UJK Technology Bandsaw Buddy (code 101807) is ideal for use with all hobby bandsaws

Visit ***axminster.co.uk*** for more details

AXCALIBER GOUND TOOTH BLADES

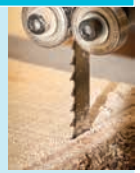

- Available exclusively at Axminster
- Unique diamond ground teeth give exceptionally clean cuts
- Stays sharper for at least 30% longer than standard blades
- Available in lengths from 1,854mm up

Blade length 2,270mm (89")	Code
6.3mm (1/4") width x 10 Tpi	505261
13mm (1/2") width x 6pti	505267
13mm (1/2") width x 10 Tpi	505268
19mm (3/4") width x 4 Tpi	505270

AXMINSTER RECOMMENDS

The Numatic PSP 180-11 Vacuum Extractor (508317) is ideal for use with this bandsaw

Visit ***axminster.co.uk*** for more details

Buy with confidence from Axminster with the FREE 3 Year Guarantee – available on all Hobby Series machines

HBS350N Bandsaw

code: 508206

The Axminster Hobby HBS350N is a floor standing bandsaw that will carry out almost all jobs that any keen hobby woodworker or woodturner demands.

The strong steel welded body features a tapered rear column design for greater rigidity. Cutting depth is precisely controlled by a handwheel operated rack and pinion whilst the substantial, surface ground, cast iron table tilts easily up to 45° on widely spaced trunnions for bevel or mitre work. The rip fence operates smoothly on a front aluminium rail and has a roller guide bearing at the rear running in a steel channel. A fine width control system is included and the fence can also be turned through 90° when smaller items need to be cut. It's also locked with a quick action cam lever, and clamps securely at both front and rear. Ball bearing roller blade guides with micro adjustment support the blade above and below helping ensure straight cuts with a good finish.

Power is provided by an 850W induction motor driving a belt through a two speed pulley to allow heavy or finer cuts to be taken. This top of the range model uses balanced, cast iron wheels which run smoothly to give adequate inertia to the blade. Twin 100mm dust outlets are provided, one positioned beneath the table providing excellent dust extraction. A wide selection of blades can be fitted, suitable for all types of cutting tasks on this machine. The leg frame stand is included and can be fitted with an optional mobility wheel set (508207).

This is a very well specified bandsaw and should satisfy the requirements of many enthusiastic home woodworkers. It's supplied with mitre fence, leg stand and a UK made Axcaliber blade.

SPECIFICATIONS

Power	850W 230V 1ph
Blade Speed	600 & 720 m/min
Blade Length	2,616mm
Blade Width Min/Max	6mm (1/4") to 16mm (5/8")
Max Width of Cut	325mm
Max Depth of Cut	200mm
Max Width of Cut with Fence	285mm
Table Size	480 x 535mm
Table Height on Stand	995mm
Table Tilt	-5° to +45°
Wheel Diameter	350mm
Dust Extraction Outlet	100mm x 2
Overall L x W x H	760 x 720 x 1,700mm
Weight	95kg

AXCALIBER GOUND TOOTH BLADES

Blade length 2,616mm (103")	Code
9.5mm (3/8") width x 10 Tpi	508245
13mm (1/2") width x 4 Tpi	508246
13mm (1/2") width x 6 Tpi	508247
13mm (1/2") width x 10 Tpi	508248
19mm (3/4") width x 4 Tpi	508249

AXMINSTER RECOMMENDS

Axminster Hobby Series HBS310 and 350N Wheel Kit (508207)

An optional wheel kit to provide mobility for the Axminster Hobby Series HBS310N and HBS350N bandsaws. Includes a bolt-on handle for the bandsaw frame.

MS210S 215mm Mitre Saw

code: 505176

This is a good quality, entry level, Hobby rated slide mitre saw with a 305 x 62mm cutting capacity.

Nine presets on the table offer the commonly required mitre angles for internal joinery and general carpentry tasks. This saw will cut accurately every time it's used as it features a 1,500W braked motor, line sighting laser and a top quality 40T TCT crosscut blade. The power head is easily tilted for bevel or compound cutting with adjustable stops for 45°. It has a comfortable handle with a tough, rubber grip and an overall of weight of 17 kg ensures it's easily carried to the workplace. The MS 210S is supplied with a work clamp that can be used on either side of the blade. It also had a pair of telescopic work supports with flip-up stops and a dust collection bag.

This is an excellent, robust design that offers very good performance.

SPECIFICATIONS

Power	1,500W 230V
Electric Brake	Yes
Spindle Lock	Yes
Blade Dia/Bore	215mm 30mm
Bevel Angle Range	0 - 45°
Mitre Angle Range	45° -0°-45°
Max Mitre Cut @45°	62 x 215mm
Max Bevel Cut @ 45°	30 x 305mm
Max Compound Cut @ 45°	30mm x 215mm
Max Crosscut @ 0°	62 x 305mm
Dust Extraction Outlet	40mm
Weight	17kg

215MM NEGATIVE RAKE TCT SAW BLADE

- Perfect for use on mitre saws
- Negative rack angle prevents blade 'climbing' over the work
- Cut entry is softer creating a smoother, safer cut

	Code
Cross Cut (56 teeth) ATB	800054

AXMINSTER RECOMMENDS

The Axminster Trade Site Mitre Saw Stand (code 101695) is ideal for use with these mitre saws

Visit *axminster.co.uk* for more details

Buy with confidence from Axminster with the FREE 3 Year Guarantee – available on all Hobby Series machines

SCROLL SAW

AWFS16 Scroll Saw

code: 501247

A heavy, cast iron base and table are two essential requirements for many woodworking machines, particularly those with a reciprocating mechanism where the weight of the cast iron can help to minimise vibration.

Powered by a 90W motor, with a capacity of 50mm under the guide, the Axminster Hobby AWFS16 scroll saw has a 400mm(16") throat and a table which tilts over to a full 0-45°. A realistic depth of cut would be 20mm with the right blade. The two blade arms are independently pivoted which gives a straight up-and-down motion to the blade resulting in a better quality of cut. A small blower tube is positioned alongside the blade; this keeps the work area clear of dust and gives a clear view of the cutline. This machine accepts pinned blades, which can be placed in the scroll saw either in line or turned through 90° if cutting longer lengths of material. For fine work, unpinned blades can also be used. This is an accurate, compact design and ought to suit most hobby users.

It's supplied with an assorted pack of Pegas, Swiss made blades, blower nozzle, eye guards and service tools. A wide range of either pinned or unpinned blades is available.

SPECIFICATIONS

Rating	**Hobby**
Power	**90W 230V**
Max Depth of Cut	**50mm, (20mm recommended)**
Table Size	**368 x 220mm**
Table Tilt	**0-45°**
Dust Extraction Outlet	**31mm**
Overall L x W x H	**540 x 250 x 330mm**
Weight	**16kg**

PEGAS SCROLL SAW BLADES

- Made in Switzerland using the best available carbon steels
- Heat treated after machining, the only method to guarantee toughness
- Wide range of blades available for a variety of applications

	Code
Skip Tooth Blade 9R - 8/6rtpi (Pkt 12)	**502305**
Skip Tooth Blade 8 - 14tpi (Pkt 12)	**502297**
Modified Geometry Blades 7SPR - 10/7 (Pkt 12)	**502309**

WIDE STONE GRINDER

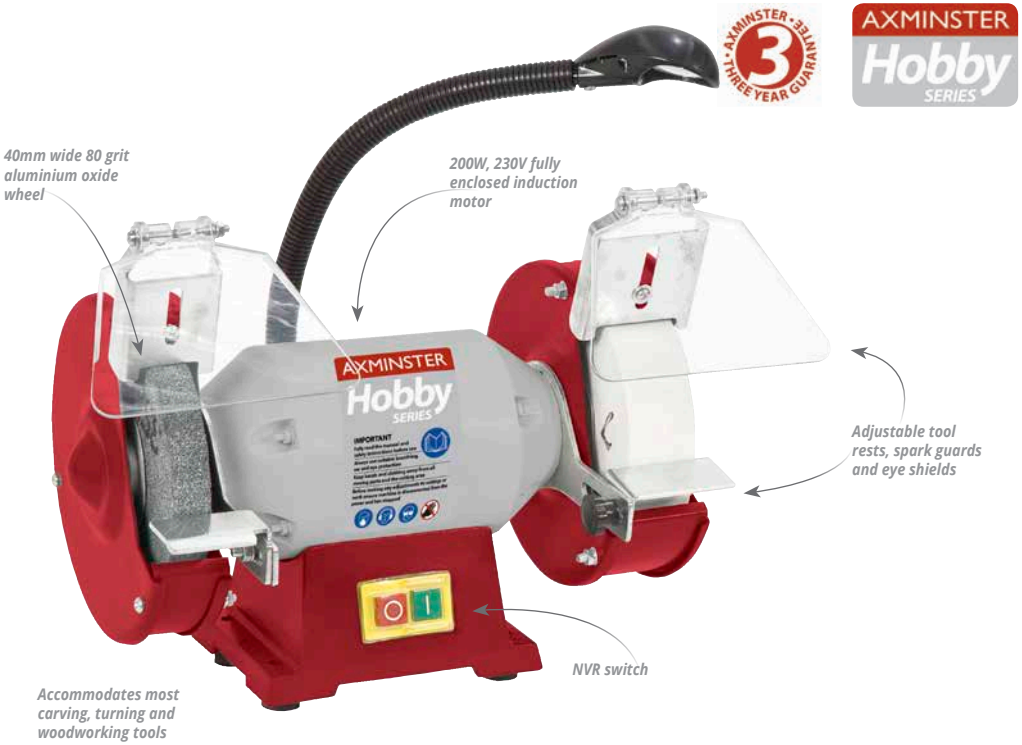

AHBGDL Wide Stone Grinder

code: 505194

This Axminster bench grinder would make an excellent addition to the hobbyist's workshop.

It features a general purpose, grey grinding wheel on the left hand side whilst on the right is a 40mm wide, 80 grit, aluminium oxide white wheel which is ideal for refinishing edge tools. This stone is wide enough to accommodate the majority of carving, turning and general woodworking tools. Being made of aluminium oxide, it's also less likely to burn the edge of the tool.

The grinder is equipped with adjustable tool rests, spark guards, NVR switch and eye shields. Wheel diameters are 150mm(6") with a bore of 12.7mm(1/2").

SPECIFICATIONS

Rating	Hobby
Power	**200W 50Hz 1ph**
Voltage	**230V**
Speed	**2,800rpm**
Wheel Diameter	**150mm**
Wheel Width	**20mm & 40mm**
Bore	**12.7mm**
Weight	**10kg**

ACCESSORIES

150mm diameter wheels	Code
20mm width 36 Grit	**500372**
40mm width 80 Grit	**400074**
Dressing Block	**410057**

Buy with confidence from Axminster with the FREE 3 Year Guarantee – available on all Hobby Series machines

AH106PT Planer Thicknesser

code: 101142

The AH106PT Planer Thicknesser is a hobby rated machine with ground, cast iron planing and thicknessing tables together with a cast iron main frame.

As it's made principally from cast iron, it's a very heavy machine and an excellent choice for the discerning home user. The mass of the machine dampens much of the vibration and this, together with a 3-knife cutter block spinning at 4,000rpm results in a very clean finish on the workpiece. The dust extraction hood is positioned underneath the table for surfacing and on top for thicknessing. Both of the tables tilt out of the way for this function.

The 3-knife cutter block is set using the excellent gauge supplied, ensuring that each HSS knife is positioned exactly in the block. We fit premium quality, resharpenable HSS knives to ensure a superb finish. Both tables are independently adjustable and electrically interlocked to avoid accidental starting without the dust extraction hood in place.

For the discerning home woodworker, this machine will prove to be a first-rate choice. It's supplied with a 13A plug and 1.5m of cable.

SPECIFICATIONS

Power	1.5kW 230V 1ph, 13A plug
Feed Speed	8m/min
Cuts per Minute	12,000
Cutterblock Speed	4,000rpm
Cutterblock Diameter	75mm
Max Thicknesser Capacity	180mm
Max Planing Width	250mm
Max Depth of Cut	2.5mm
Max Depth of Cut Planer	5mm
Max Depth of Cut Thicknesser	2.5mm
Knives	HSS(Resharpenable) x 3
Length of Table	260 x 1,090mm
Dust Extraction Outlet	100mm
Min Extraction Airflow Required	1,000m³/hr
Overall L x W x H	1,090 x 750 x 1,000mm
Weight	150kg

ACCESSORIES

	Code
TCT 250mm Planer Knives (3)	210333
HSS 250mm Resharpenable Knives (3)	340367
Planer Blade Hone	510258
Planer Blade Setting Jig	700360
Machine Wax 400g	101582

AXMINSTER RECOMMENDS

PACKAGE DEAL

Ideal for the hobby workshop

The AH106PT Planer Thicknesser and FM300BC Dust Extractor (719094)

COMBINATION MACHINE

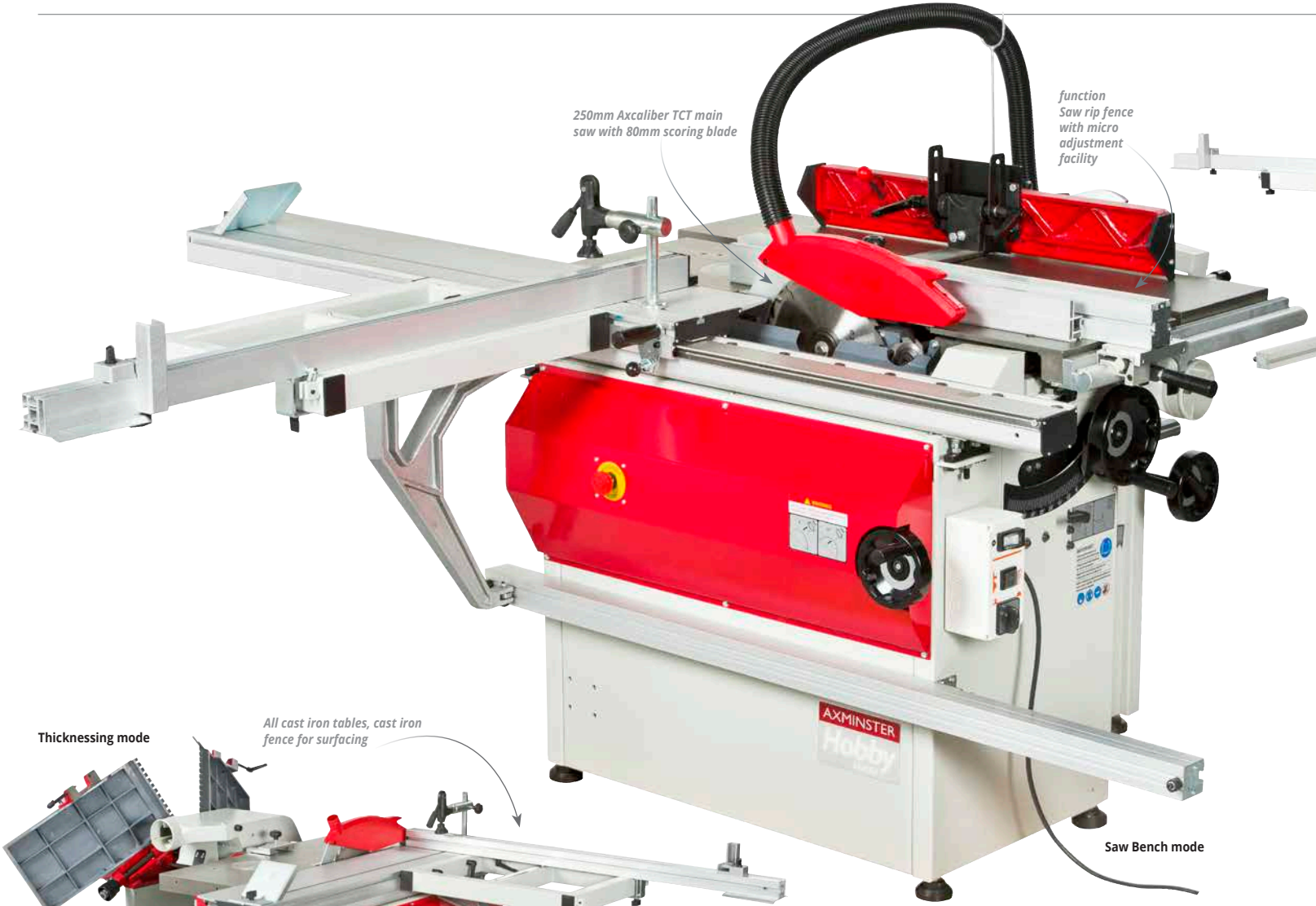

250mm Axcaliber TCT main saw with 80mm scoring blade

function Saw rip fence with micro adjustment facility

Planer thicknesser

Wheel kit allows easy movement around the workshop

Saw Bench mode

Thicknessing mode

All cast iron tables, cast iron fence for surfacing

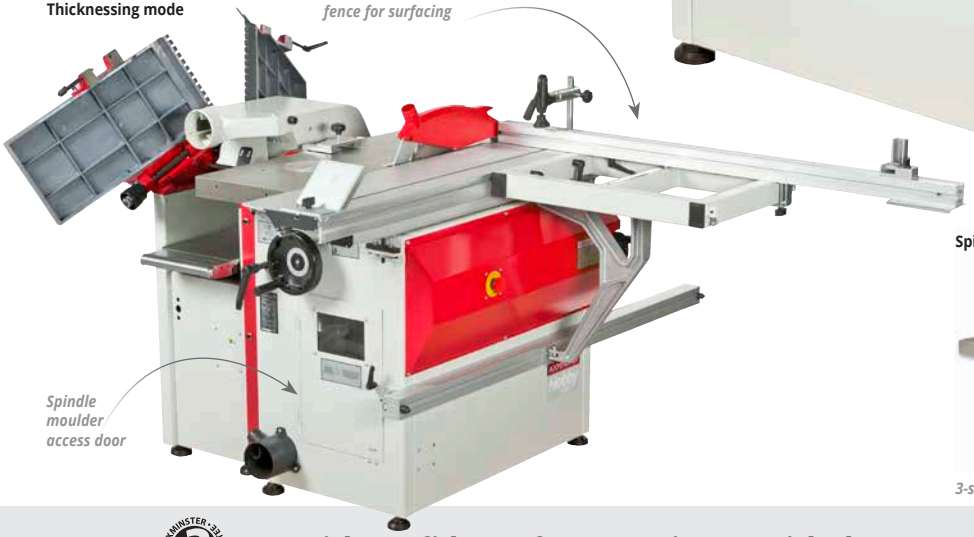

Spindle moulder access door

Spindle Moulder mode

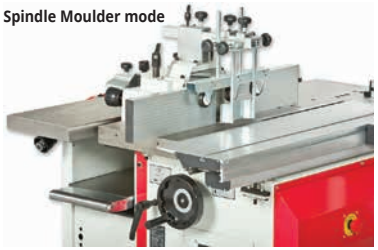

3-speed spindle moulder

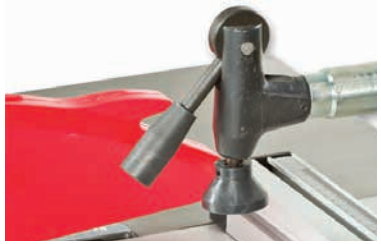

Work clamp

Table extension and telescopic extension

Buy with confidence from Axminster with the FREE 3 Year Guarantee – available on all Hobby Series machines

AWC4 250mm Deluxe Combination Machine

code: 501249

This is a very well designed, four function machine offering all the performance and capacities that the keen home woodworker requires.

It's built around a rugged steel chassis with cast iron tables that have been ground to a fine finish. Considerable thought has also been given to make each function as easy to use as possible. The machine features a 250mm diameter TCT saw blade offering 65mm maximum depth of cut together with a scoring blade underneath the table for coated boards. The smooth running, 1,200 x 120mm aluminium sliding table is fitted with a cross-cut frame that can be positioned where required, together with a fence rail that extends at 90° to 2,000mm. The sliding table is adjustable for both height and can also be fine tuned to run parallel to the blade. A work clamp and board edge shoe are also provided. The rip fence is a deep section aluminium extrusion and has a micro adjustment facility. A 100mm dust outlet with a crown guard extraction point is fitted. The spindle moulder has three speeds, a 30mm spindle with a travel of 130mm and a maximum tooling diameter of 140mm. The spindle cutter guards have large alloy fences which are adjustable for depth of cut and cutter slot gap. Sprung loaded hold down clamps are also provided. A 100mm chip outlet allows good extraction with a suitable extractor; highly desirable with this type of machine. The planer/thicknesser offers a width of 250mm over the top surface and a thicknessing capacity of 250mm x 180mm. The planing tables are 1,050mm long and each hinges individually out of the way for the thicknessing function. Excellent chip extraction is provided by a pivoting chute with a 100mm outlet. A separate control lever operates the thicknesser feed rollers giving a speed of 8m/min and this operates in tandem with the three bladed cutter block resulting in a very clean finish on the work.

A simple-to-use switching system controls each function in a safe manner with separate emergency stops and main circuit NVR protection. A mobility kit is provided to make it easy to move this machine around the workshop.

This is an excellent machine for those workshops where space is at a premium and it also presents very few of the compromises that frequently occur in some combination machines. It should be noted that a 16A supply is required.

SPECIFICATIONS

Power	3,000W(Saw)2,000W(Planer) 3,000W(Spindle) 230V
Number of Motors	3
Blade Speed	4,050rpm
Blade Tilt	0 - 45°
Blade Dia/Bore	250mm x 30mm
Table Size	1,200 x 840mm(Saw) 250 x 1,050mm (Planer) 250 x 600mm (Thicknesser)
Max Ripping Width	460mm
Max Depth of Cut @ 45°	45mm
Max Depth of Cut @ 90°	65mm
Max Planing Width	250mm
Sliding Table Size	1,200 x 120mm
Cutterblock Speed	4,000rpm
Cutterblock Diameter	75mm
Knives	HSS x 3
Feed Speed	8m/min
Max Thicknesser Capacity	180mm
Spindle Speed	3,500, 5,500, & 7,500rpm
Spindle Diameter	30mm
Spindle Travel	130mm
Max Tooling Diameter Above Table	140mm
Dust Extraction Outlet	100mm x 3
Weight	370kg

AXCALIBER REBATE BLOCK

	Code
Axcaliber 2 Knife Rebate Block	501124

AXCALIBER CONTRACT SAW BLADES

250mm Diameter Blades	Code
General Purpose (40 teeth) ATB	800067

AXCALIBER PREMIUM SAW BLADES

254mm Diameter Blades	Code
Fine (60 teeth) TCG	951522
Extra Fine (80 teeth) TCG	951523

MAINTENANCE KIT

Maintenance Kit (717850)

AXMINSTER RECOMMENDS

PACKAGE DEAL

Ideal workshop combination

AWC4 Combination Machine & FM300BC Extractor (717573)

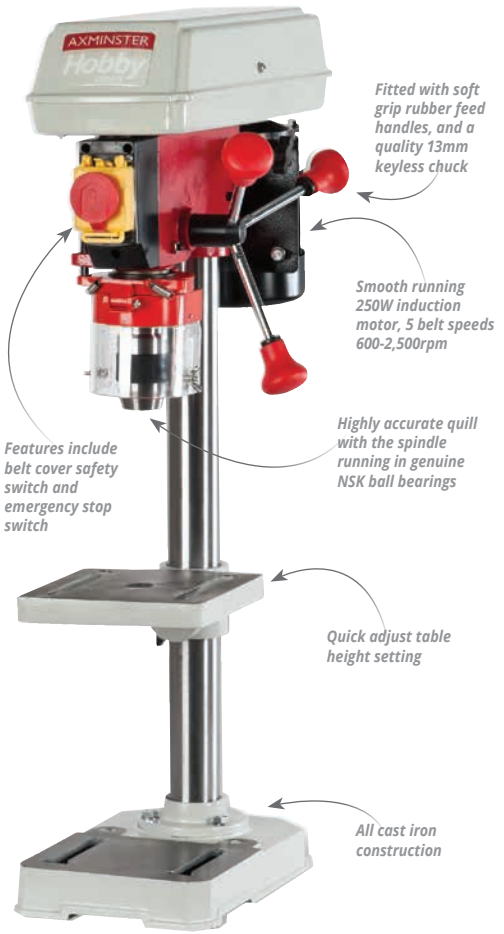

AHDP13B
Bench Pillar Drill

code: 101925

This is a small bench pillar drill for hobby use. Robustly made from cast iron and machined steel, it has a highly accurate quill and spindle assembly to ensure consistent drilling.

Powered by a 250W induction motor, there are five belt speeds between 600-2,500rpm. The operating handle is fitted with three soft handgrips and there is a convenient drilling depth control. A good quality 1.5-13mm keyless chuck is also fitted. Table height is easily adjusted and the whole assembly can be swivelled away to allow the base to be used as a work support. The NVR switch and the adjustable chuck guard are conveniently mounted at the front of the drill. There is a micro safety switch fitted to the belt cover which ensures the power is disconnected when it's open. This small pillar drill would be a very useful machine to have in any modest home workshop.

Please note that the morticing attachment is not suitable for this machine.

SPECIFICATIONS

Power	250W (230V 1ph)
Speed Range	(5) 600-2,500rpm
Throat	105mm
Chuck Cap/Type	1.5-13mm Keyless
Chuck Travel	50mm
Max Chuck to Table	285mm
Max Chuck to Base	380mm
Diameter of Column	46mm
Table Size	165 x 165mm
Table Tilt	-45° to +45°
Base Size	285 x 185mm
Overall L x W x H	500 x 280 x 735mm

ACCESSORIES

	Code
8 piece SP Wood Twist Drill Bit Set	502125
16 Piece Forstner Bit Set	501941
Drill Press Vice 63mm x 61mm	220032

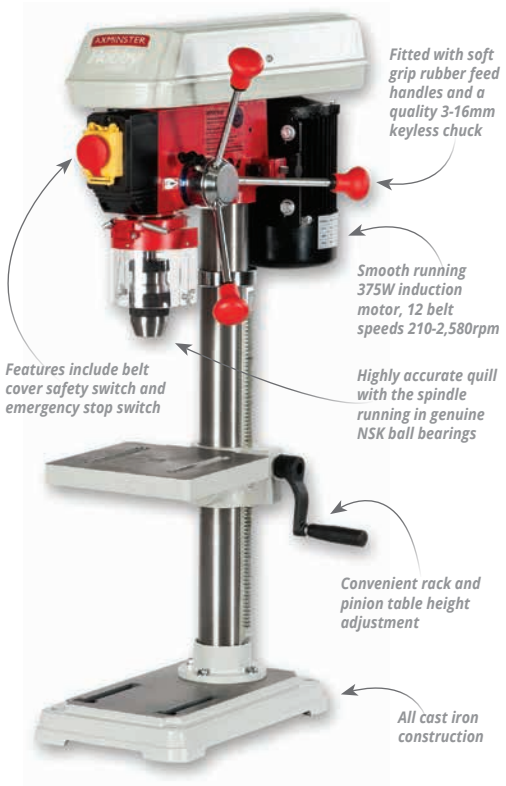

AHDP16B
Bench Pillar Drill

code: 101926

This is a slightly larger bench pillar drill for hobby use. Robustly made from cast iron and machined steel, it has a highly accurate quill and spindle assembly to ensure consistent drilling.

Powered by a 375W induction motor, there are twelve belt speeds between 210-2,580rpm. The operating handle is fitted with three soft handgrips and there is a convenient drilling depth control. A good quality 3-16mm keyless chuck is also fitted. The table height is controlled via a rack and pinion system and the whole assembly can be swivelled away to allow the base to be used as a work support. The NVR switch and the adjustable chuck guard are conveniently mounted at the front of the drill. There is a micro safety switch fitted to the belt cover which ensures the power is disconnected when it's open. This compact pillar drill offers a little more capacity but is still compact in size and would be an excellent choice for any hobbyist's workshop.

Please note that the morticing attachment is not suitable for this machine.

SPECIFICATIONS

Power	375W (230V 1ph)
Speed Range	(12) 210-2,580rpm
Throat	127mm
Chuck Cap/Type	3-16mm Keyless
Chuck Travel	60mm
Max Chuck to Table	315mm
Max Chuck to Base	430mm
Diameter of Column	60mm
Table Size	240 x 240mm
Table Tilt	-45° to +45°
Base Size	340 x 210mm
Overall L x W x H	530 x 280 x 840mm

ACCESSORIES

	Code
8 piece SP Wood Twist Drill Bit Set	502125
16 Piece Forstner Bit Set	501941
Drill Press Vice 63mm x 61mm	220032

Buy with confidence from Axminster with the FREE 3 Year Guarantee – available on all Hobby Series machines

Clear depth scale reader with depth stop clamp

Drill table

AHDP16F Floor Pillar Drill

code: 101927

This is a compact, powerful, floor standing pillar drill for hobby use.

Robustly made from cast iron and machined steel, it has a highly accurate quill and spindle assembly to ensure consistent drilling. Powered by a 375W induction motor, there are twelve belt speeds between 210-2,580rpm.The operating handle is fitted with three soft handgrips and there is a convenient drilling depth control. A good quality 3-16mm keyless chuck is fitted. Table height is adjusted via a rack and pinion system and the whole assembly can be swivelled away to allow the base to be used as a work support. The NVR switch and the adjustable chuck guard are conveniently mounted at the front of the drill. There is a micro safety switch fitted to the belt cover which ensures the power is disconnected when it's open.

This compact floor pillar offers impressive performance and capacity together with a small workshop footprint.

SPECIFICATIONS

Power	**375W (230V 1ph)**
Speed Range	**(12) 210-2,580rpm**
Throat	**165mm**
Chuck Cap/Type	**3-16mm Keyless**
Chuck Travel	**80mm**
Max Chuck to Table	**890mm**
Max Chuck to Base	**1,125mm**
Diameter of Column	**70mm**
Table Size	**310mm diameter**
Table Tilt	**-45° to +45°**
Base Size	**420 x 250mm**
Overall L x W x H	**560 x 330 x 1,580mm**

ACCESSORIES

	Code
8 piece SP Wood Twist Drill Bit Set	**502125**
16 Piece Forstner Bit Set	**501941**

AHRD16F Floor Radial Drill
AHRD16B Bench Radial Drill

code: 101929

code: 101928

The most outstanding feature of these machines is the variable drilling width capacity of between 210mm and 420mm, measured from the centre line of the chuck to the front face of the column.

This allows a maximum drilling width well above the normal capacity of a drill press and together with the ability to vary the drilling angle, it makes for a pair highly versatile machines. The horizontal movement of the head is controlled by a rack and pinion system which can be firmly locked in position. Tilting is easily achieved by undoing a locking knob at the top of the column, setting the required angle against a scale and re-locking the knob. There is a positive locating pin which runs in a keyway on the horizontal bar to ensure that the head returns exactly to the vertical. The 370W induction motor drives the drilling head through a V belt and a choice of five pulleys giving a speed range of (5) 500-2,450rpm. A 3-16mm keyless chuck is fitted on both of these machines.

In other respects these drill presses are similar to the standard models, with an accurate quill and fitted with soft handgrips on the operating handle, NVR switch, chuck guard and belt cover safety switch. It is important to note that on both machines, the chuck is located in the drive quill with the conventional Morse taper which requires an axial loading to keep it securely in place; if the head is used in the horizontal position together with a sanding drum or polishing mop, there is a risk of the chuck coming loose.

These are a pair of universal and adaptable drilling machines that will be an asset in any home workshop. The morticing attachment is not suitable for these machines.

SPECIFICATIONS	AHRD16F	AHRD16B
Power	375W (230V 1ph)	375W (230V 1ph)
Speed Range	(5) 500 - 2,450rpm	(5) 500 - 2,450rpm
Throat	420mm	420mm
Chuck Cap/Type	3-16mm Keyless	3-16mm Keyless
Chuck Travel	80mm	80mm
Max Chuck to Table	680mm	220mm
Max Chuck to Base	1,180mm	375mm
Diameter of Column	60mm	60mm
Table Size	310mm diameter	230 x 210mm
Table Tilt	-45° to +45°	-45° to +45°
Base Size	450 x 270mm	450 x 270mm
Overall L x W x H	820 x 320 x 1,630mm	840 x 320 x 790mm

ACCESSORIES

	Code
8 piece SP Wood Twist Drill Bit Set	502125
16 Piece Forstner Bit Set	501941

Buy with confidence from Axminster with the FREE 3 Year Guarantee – available on all Hobby Series machines

AXMINSTER RECOMMENDS

The AW16BMST Riser Block Kit (950175) is ideal for use with this morticer

AW16BMST2 Bench Morticer

code: 501252

This bench top machine is predominately made from heavy cast iron with the benefit of longitudinal and transverse table movement.

The workpiece is positioned on the table using the convenient hand wheels. The table work clamp have multiple locating pin positions so that tapered work such as table legs can be clamped. The table and headstock both run on dovetail slides and are provided with adjustable jib strips ensuring years of accurate use. A gas strut counterbalances the weight of the head and motor and gives precise control when the bit is plunged into the work. An upgraded, quiet and cool running, alloy bodied motor provides ample power for any job.

When repeat work is produced, stops are provided for both vertical and horizontal movement. One useful accessory is our unique spacer block that can raise the headstock by 50mm, allowing even taller workpieces to be accommodated and the optional drill chuck will also convert this morticer into a capable small bench drill. This is an excellent, bench mounted morticer for home use but please note, however good the machine, it's only as good as the chisel and bit fitted!

Supplied with mortice auger chuck and key, chisel bush and service tools. It will accept 3/4" shank chisels only.

SPECIFICATIONS

Power	**550W 230V 1ph**
Chisel Stroke	**100mm**
Centre of Chisel to Back Fence	**70mm**
Max Height of Timber with 12.7mm Chisel and Bit	**110mm (160mm with optional spacer block)**
Max Chisel Size Softwood	**16mm**
Max Chisel Size Hardwood	**16mm**
Overall L x W x H	**275 x 440 x 640mm**

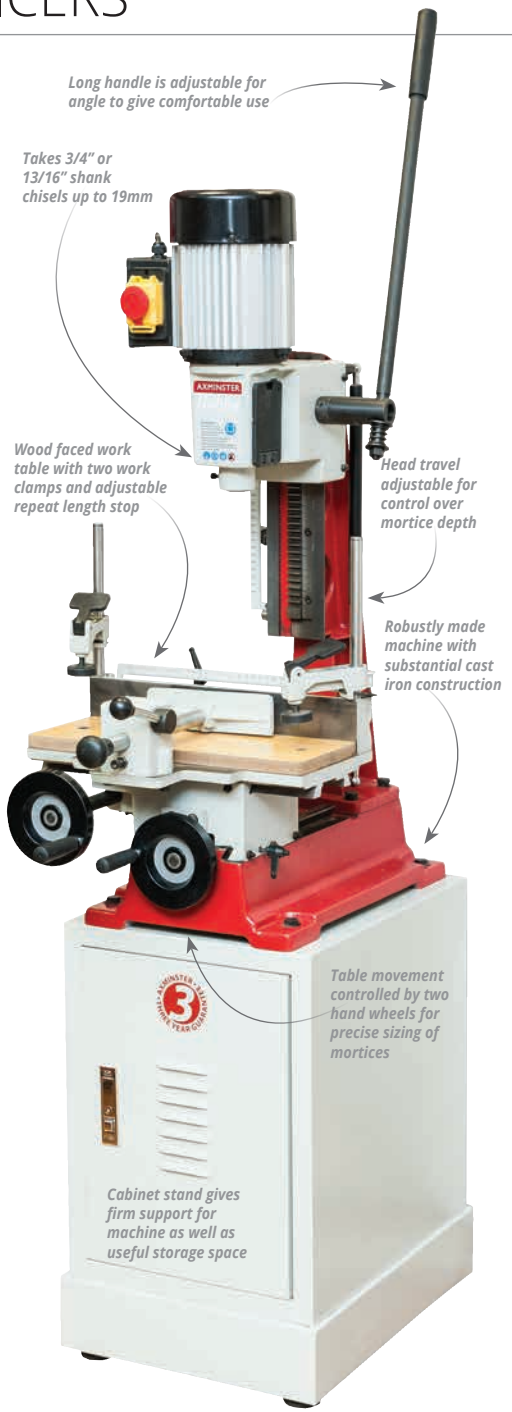

AW19FM Floor Standing Morticer

code: 501253

This is a robust morticer of substantial cast iron construction, suitable for use in any home workshop and with plenty of power to cut up to 19mm mortises in softwoods.

The table travel is controlled by two hand wheels; one for longitudinal and one for the transverse movement, each being precise as dovetail slides are machined which include jib strips for fine adjustment. The table has a wooden facing for through morticing as well as a length stop for repetition work and is also fitted with a very convenient quick acting vice and two cam-operated work clamps.

There is a very clear and well positioned scale at the rear of the table and this, combined with the two travel stops, ensures that long mortises are cut very accurately. The feed handle can be easily re-positioned on its shaft to give the most convenient working position. The weight of the headstock is also counterbalanced by a gas strut and the vertical movement is controlled by a pair of stops with an easy-to-read scale. The morticing chisel is located in a mounting bush, which is either 3/4" or 13/16" diameter (depending on the size of the chisel) and the auger is driven by a 16mm capacity drill chuck. The morticer is mounted on a cabinet base which includes a cupboard with shelf space for storage.

This is an excellent, floor mounted morticer for home use but please note, however good the machine, it's only as good as the chisel and bit fitted!

SPECIFICATIONS

Power	**750W (230V, 1ph)**
Chisel Stroke	**220mm**
Centre of Chisel to Back Fence	**140mm**
Max Height of Timber with 12.7mm Chisel and Bit	**220mm**
Max Chisel Size Softwood	**19mm**
Max Chisel Size Hardwood	**16mm**
Overall L x W x H	**560 x 400 x 1,540mm**

AWDS12H 300mm Disc Sander

code: 501260

The 300mm disc on this machine is driven by a quiet, 750W induction motor and accepts the full range of our 300mm diameter, self-adhesive discs.

Should self adhesive discs be used, they can easily be removed (complete with their glue) by gently warming with a hot air gun. The motor is controlled by a no-volt-release switch and there is a manual brake provided to slow the disc down in a few seconds. The cast iron sanding table has a ground top surface and is provided with a slot for the adjustable mitre fence which can be used for end grain sanding. The table tilts to 45° and is firmly locked in position with heavy duty handles at both ends. Dust is extracted from the bottom of the disc via a shroud which terminates in a 63mm diameter outlet. A 450mm length of flexible hose is provided with the machine; this has a 60mm diameter sleeve at the end which will connect directly to an extractor.

This disc sander is a good value-for-money machine which ought to be a great asset in any hobbyist's workshop.

SPECIFICATIONS

Power	750W 230V 1ph
Speed	1,420rpm
Diameter of Disc	300mm
Table Size	445 x 155mm
Table Tilt	45°
Dust Extraction Outlet	63mm
Overall L x W x H	500 x 470 x 420mm
Weight	30kg

HERMES ABRASIVE DISCS

	Code
40 Grit (ea)	810259
60 Grit (ea)	810260
80 Grit (ea)	810261
100 Grit (ea)	810254
120 Grit (ea)	810256
180 Grit (ea)	810258

AXMINSTER RECOMMENDS

The Numatic PSP 180-11 Vacuum Extractor (508317) is ideal for use with this sanding machine

We also recommend the use of a hose reducer (code 102535)

Visit ***axminster.co.uk*** for more details

Buy with confidence from Axminster with the FREE 3 Year Guarantee – available on all Hobby Series machines

AW130BD2 Belt & Disc Sander

code: 501255

The AW130BD2 Belt & Disc Sander is a small, bench top machine intended for the hobbyist model or toy maker.

With a 25mm(1") belt and a tilting table, the machine is well suited to profiling, finishing or denibbing. The 125mm(5") diameter disc is provided with its own table and mitre fence making it suitable for end grain work. This is an effective small sanding machine with a host of applications in the hobbyist's workshop. Forty five mm diameter dust extraction outlets are provided; one each for the belt and disc.

Supplied with a single sanding belt and disc.

SPECIFICATIONS

Power	**190W 230V 1ph**
Belt Speed	**14.3m/min**
Belt Size	**25 x 760mm**
Diameter of Disc	**125mm**
Table Size Belt	**125 x 125mm**
Table Size Disc	**88 x 184mm**
Dust Extraction Outlet	**2 x 45mm**
Overall L x W x H	**370 x 300 x 380mm**
Weight	**7kg**

HERMES SANDING BELTS

	Code
60 Grit (ea)	110385
100 Grit (ea)	110386
150 Grit (ea)	110387

HERMES ABRASIVE DISCS

	Code
60 Grit (Pkt 10)	702639
80 Grit (Pkt 10)	702640
100 Grit (Pkt 10)	702641
120 Grit (Pkt 10)	702642
Mixed Pack of 10 Discs 60-150G	702856

AXMINSTER RECOMMENDS

Abrasvive belt and disc cleaners. Two sizes available. Standard (310398) and large (310389) are ideal for all Hobby sanding machines

Visit ***axminster.co.uk*** for more details

AXMINSTER RECOMMENDS

The Numatic PSP 180-11 Vacuum Extractor (508317) is ideal for use with this sanding machine

We also recommend the use of a hose reducer (code 102533)

Visit ***axminster.co.uk*** for more details

AS408 Belt & Disc Sander

code: **501257**

Any hobbyist woodworker seeking a better quality belt and disc sander need look no further.

The main cast iron body houses both the motor and the no-volt-release switch, as well as forming the mounting point for the sanding table. The table is removable and can be used either on the 200mm disc or on the 100mm wide belt when it's raised from the horizontal to the vertical. The sanding table is also easy to adjust and can be firmly locked in position. Changing the elevation of the sanding belt is straightforward using two very accessible captive bolts so that when loosened, they allow the table to be rotated to either position. For added safety, especially when the sander is elevated into the vertical position, the belt is guarded at the back and just below the sanding stop fence. Many sanders have no guarding behind the disc or at best a poorly fitting guard.

The AS408, however, has an excellent guard assembly which fits accurately around the disc and incorporates a 35mm dust extraction point under the table. This outlet also serves the belt so that the extractor can be left connected to one outlet and both functions of the machine can then be used without the need to disconnect the dust extraction hose. The belt change is simplicity itself with a quick action belt release and simple tracking controls.

Supplied with a self-adhesive disc, aluminium mitre fence and standard 100 x 915mm belt.

SPECIFICATIONS

Power	**250W 230V 1ph**
Belt Speed	**520m/min**
Belt Size	**100 x 915mm**
Diameter of Disc	**200mm**
Table Size Disc	**220 x 150mm**
Dust Extraction Outlet	**35mm**
Overall L x W x H	**500 x 440 x 370mm**
Weight	**18kg**

HERMES SANDING BELTS

	Code
40 Grit (ea)	**100444**
60 Grit (ea)	**100445**
80 Grit (ea)	**100446**
100 Grit (ea)	**100447**
120 Grit (ea)	**100448**
150 Grit (ea)	**100449**
180 Grit (ea)	**100450**
Pack of 5 Belts 60-150G	**100202**

HERMES ABRASIVE DISCS

	Code
60 Grit (Pkt 5)	**702657**
80 Grit (Pkt 5)	**702658**
100 Grit (Pkt 5)	**702659**
120 Grit (Pkt 5)	**702660**
Mixed Pack of 10 Discs 60-150G	**702858**

AXMINSTER RECOMMENDS

The Numatic PSP 180-11 Vacuum Extractor (508317) is ideal for use with this sanding machine

We also recommend the use of a hose reducer (code 102534)

Visit ***axminster.co.uk*** for more details

Buy with confidence from Axminster with the FREE 3 Year Guarantee – available on all Hobby Series machines

AHBS336 Oscillating Spindle Sander

code: 508344

This is a simple oscillating bobbin sander for use in the home workshop. This type of machine is very useful for finishing curved shapes and other small parts.

The bobbin oscillates vertically by 24mm, spreading the wear over more of the sanding sleeve. The cast iron table tilts up to 45° and has several nylon table inserts which fit closely around the bobbin. The 370W induction motor is quiet in use and runs at 1425 rpm which ought not to burn the work. The base is fabricated in sheet steel and has storage for spare bobbins and table inserts. Dust extraction is via a 50mm port on the rear and should be connected to a suitable vacuum extractor. A sturdy machine such as this bobbin sander would be a great asset for the keen hobbyist's workshop, especially where curved work is being produced.

Supplied with 19mm, 38mm, 50mm and 76mm bobbins.

SPECIFICATIONS

Power	**Input 370W**
Speed	**1,425rpm**
Stroke	**22mm**
Max Cap @ 90	**110mm**
Height of Bobbins	**140mm**
Table Size	**370 x 370mm**
Dust Extraction Outlet	**50mm**
Weight	**33kg**

SANDING BOBBINS

	Code
38 x 140mm 80G Loading	**575839**
50 x 140mm 60G Loading	**575842**
50 x 140mm 150G Loading	**575845**
76 x 140mm 100G Loading	**575848**
19 x 230mm 60G Loading	**575814**

AXMINSTER RECOMMENDS

Abrasive Belt & Disc Cleaners (310398)

Visit ***axminster.co.uk*** for more details

AXMINSTER RECOMMENDS

The Numatic PSP 180-11 Vacuum Extractor (508317)is ideal for use with this sanding machine

We also recommend the use of a hose reducer (code 102533)

Visit ***axminster.co.uk*** for more details

AWDE5002 Extractor *code:* 501262

This extractor can be used in small home workshops where a higher airflow than one provided by a vacuum extractor is required.

The quiet running, 750W induction motor provides adequate power to extract coarse dust and chippings from many small workshop machines. The inlet diameter is 100mm(4"), the outlet into the bag is 100mm(4") and the airflow is sufficient to handle the majority of waste likely to be produced in the small home workshop. A useful feature is that it can be used either on the floor or suspended from a sturdy wall using the two hanging brackets provided. The extractor is bolted to a rolling base and a useful grab handle allows mobility. Please note that this is a chippings extractor and should not be expected to collect fine sanding dust. As with all the high volume low pressure airflow machines, the inlet should not be restricted to below 75mm diameter and the bag should be emptied regularly, though there is a spare bag provided.

Extraction hose is not supplied with this machine.

SPECIFICATIONS

Power	**750W (230V, 1ph)**
Air Flow	**850m³/hr @ 100mm**
Noise Level	**70dB(A)**
Filtration	**30 micron**
Particle Size	**30 micron**
Hose Diameter	**100mm**
Bag Capacity	**37 litres**
Overall L x W x H	**380 x 1,100 x 410mm**
Weight	**22kg**

FLEXIBLE EXTRACTION HOSE KIT

	Code
4m x 100mm Extraction Hose Kit	**211597**
2m x 100mm Extraction Hose Kit	**501082**

LIGHTWEIGHT PVC EXTRACTION HOSE

	Code
Clear Hose 102mm x 1m	**200776**
Clear Hose 102mm x 2.5m	**200777**
Clear Hose 102mm x 5m	**200778**
Clear Hose 102mm x 10M	**505005**

Buy with confidence from Axminster with the FREE 3 Year Guarantee – available on all Hobby Series machines

AWEDE2 Extractor

code: 501263

A chip and coarse dust extractor for extracting from saws, planers, spindle moulders, bandsaws and similar machines in a small hobby workshop.

It's equipped with a cloth bag at the top to act as the filter. Power comes from a 750W induction motor with a no-volt-release switch and emergency stop button. A single 100mm inlet can be used to connect to machines with a similar sized extraction port and it should be noted that using smaller diameter hoses will severely reduce the airflow. If required, the lower cloth collection bag can be replaced with a plastic waste sack, which is more convenient for storage of waste prior to disposal. An unusual feature of this extractor is the floor sweeping attachment which fits to the base of the machine, allowing the extractor to be wheeled around the workshop collecting waste as it goes.

There is a fine filter bag available for use when collecting medium sized dust particles, or alternatively, an optional fine dust cartridge filter can be fitted. A plastic waste sack should be used with the fine filter bag or cartridge filter. The machine is supplied with approximately 600mm length of inlet hose; additional lengths of 100mm hose are available separately. The size of the waste sack used in this machine is 560 x 915mm (340068).

SPECIFICATIONS

Power	750W (230V, 1ph)
Air Flow	850m³/hr
Noise Level	73dB(A)
Filtration	30 micron
Particle Size	30 micron
Hose Diameter	100mm
Bag Capacity	57 litres
Overall L x W x H	790 x 370 x 1,530mm
Weight	24.5kg

EXTRACTOR HOSE

	Code
600mm	211597

AXMINSTER RECOMMENDS

AWEDE2 Extractor and Filter Cartridge PACKAGE DEAL (717657)

Visit ***axminster.co.uk*** for more details

AXMINSTER RECOMMENDS

AWEDE2 Extractor and Hose PACKAGE DEAL (717698)

Visit ***axminster.co.uk*** for more details

FM300BC Extractor

code: 501264

This extractor, with its 1.5kW motor, large capacity collection bag and twin 100mm hose inlets, will handle most single machines in a hobbyist's workshop.

Larger individual machines can be connected to the single 125mm inlet or the twin 100mm adaptor may be used for two smaller machines. The top cloth bag acts as the filter whilst the lower plastic bag collects the coarse dust and chippings which allow a number to be filled and stored ready for bulk disposal. Bag hooks are incorporated on the casing to make changing a full bag an easy task. The extractor's filtration system can be upgraded with the addition of the cartridge filter which has a large surface area and thus does not reduce the airflow. A simple rotating handle is used to clean the filter. The solid connection tube between the impeller housing and collector creates an efficient air flow system. For best results, the hose size should be kept to a minimum of 100mm, using a smaller diameter hose will drastically reduce the airflow. Castors on the base allow for easy mobility around the workshop.

This is a good, solid, extractor and would be an excellent choice in a larger workshop. The size of the waste sack used in this machine is 785 x 1,200mm (501187).

SPECIFICATIONS

Power	1.5kW (230V, 1ph)
Air Flow	2,000m³/hr @100mm inlet 2,500m³/hr @125mm inlet
Noise Level	77dB(A)
Filtration	30 micron
Particle Size	30 micron
Hose Diameter	1 x 125mm or 2 x 100mm
Bag Capacity	150 litres
Overall L x W x H	920 x 560 x 1,960mm
Weight	47kg

FLEXIBLE EXTRACTION HOSE KIT

	Code
4m x 100mm Extraction Hose Kit	211597
2m x 100mm Extraction Hose Kit	501082

LIGHTWEIGHT PVC EXTRACTION HOSE

	Code
Clear Hose 102mm x 1m	200776
Clear Hose 102mm x 2.5m	200777
Clear Hose 102mm x 5m	200778
Clear Hose 102mm x 10M	505005

AXMINSTER RECOMMENDS

FM300BC Extractor and Filter Cartridge PACKAGE DEAL (717658)

Visit ***axminster.co.uk*** for more details

Buy with confidence from Axminster with the FREE 3 Year Guarantee – available on all Hobby Series machines

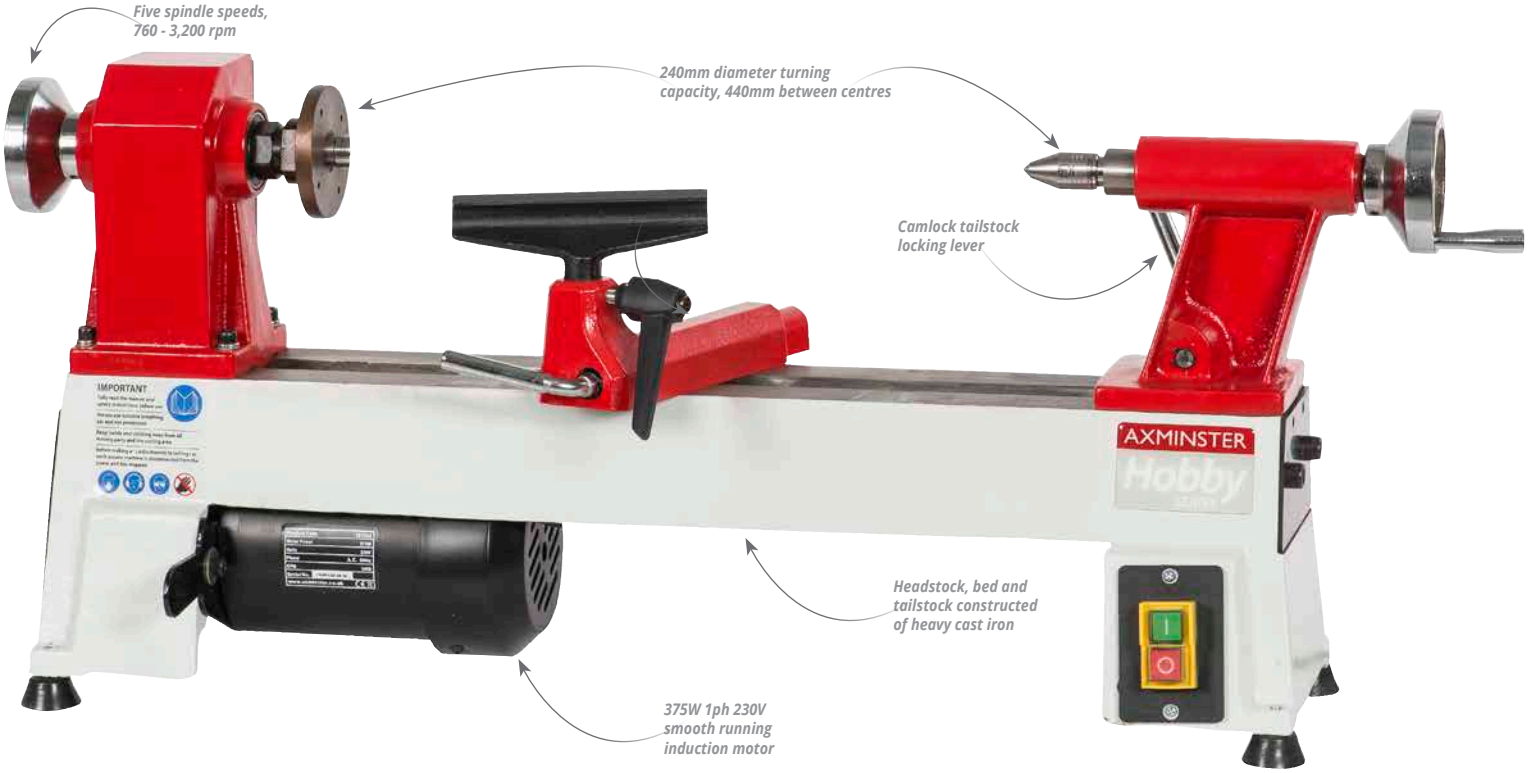

AWSL Woodturning Lathe

code: 501245

The AWSL Woodturning Lathe is a small hobby lathe with five spindle speeds.

It has turning capacities of 240mm diameter and 440mm between centres. It's particularly appealing for the newcomer to turning who has a limited budget available and only enough space for a small lathe. The headstock, bed and tailstock are constructed of heavy cast iron whilst the 375W induction motor has more than enough power for the type of projects likely to be produced on a lathe of this size. The five spindle speeds give a useful range of between 760-3,200rpm. Both the headstock spindle and tailstock barrel are bored to take 2MT accessories, with the spindle having the familiar 1" x 8tpi thread. The tailstock also has a hollow barrel to enable long hole boring. The lathe is supplied with an Axminster drive, a revolving tailstock centre, a 75mm diameter faceplate and a 150mm tool rest.

It should be noted that the distance between centres will vary and be dependent on the type of centres or accessories used.

SPECIFICATIONS

Power	375W
Speed	(5) 760-3,200rpm
Spindle Taper	2MT
Spindle Thread	1" x 8tpi (Ref T04M)
Taper Tailstock	2MT
Distance Between Centres	440mm(17"), 965mm(38") with extension
Max Diameter over Bed	240mm
Tool Rest Stem Diameter	16mm
Overall L x W x H	865 x 205 x 365mm
Weight	38kg

CLUBMAN SK80 CHUCK

code: **504546**

- One piece stainless steel body 80mm diameter
- Durable stainless steel body
- Jaw movement controlled by toothed key
- Choice of 2 mounting threads
- Supplied with accessory mounting jaws and a standard chuck key
- A range of jaw options are available
- For more information on chucks, see page 31

STARTER KITS

- 80mm or 100mm Axminster clubman chuck and accessories
- Set includes chuck, dovetail jaws (C), matching faceplate ring and screw chuck
- Made in Axminster using CNC production techniques
- Direct threaded chuck body ensures concentricity
- Stainless steel for maximum corrosion resistance
- Chuck features our SafetyJaw accessory mounting jaws
- Packed into a strong plastic storage box

	Code
SK100 Starter Kit	101966
SK80 Starter Kit	101969

LATHE AND STARTER KIT PACKAGE DEAL

	Code
Axminster AWSL Lathe & SK100 Starter Kit	717922
Axminster AWSL Lathe & SK80 Starter Kit	717926

BED EXTENSION

	Code
Bed Extension	503035

AH-1218VS Woodturning Lathe

code: **505021**

For those looking for slightly larger capacities and more motor power than is normally found on small bench top lathes either of these would be a great choice.

Made almost entirely of cast iron, the bed of these lathes has a finely ground top surface which ensures stability and minimal vibration during use. The thick walled cast iron headstock and tailstock provide rigidity, and will give years of trouble-free turning pleasure. The hollow tailstock (9mm bore) allows long-hole boring to take place using a standard long-hole boring auger, and features automatic ejection of centres. Quick release levers allow for easy and accurate positioning of the tool rest and tailstock. The lathes are powered by a 500W motor, which is smooth and quiet during operation. The AH-1218 has a choice of five belt ratios and the AH-1218VS features electronic variable speed utilising two speed ranges for maximum torque at lower speeds. The spindle nose has the very common 1" x 8tpi thread and a 2MT internal taper, so a large range of accessories are available for these lathes. An indexing pin can be located into the headstock to provide indexing at 15° intervals. **(This should not be used as a spindle lock).**

Solid rubber feet help to eliminate movement where in operation. The tailstock barrel has 50mm of movement and includes a 2MT live centre. An additional bed extension is available, giving an extra capacity of 670mm between centres. These are great lathes for those looking for that bit of extra power and capacity, but retaining portability.

Supplied with Axminster drive and live centres, 150mm tool rest, 75mm faceplate and indexing pin.

N.B. The distance between centres will vary and be dependent on the type of centres or accessories used.

SPECIFICATIONS

Power	**500W (230V)**
Speed	**(2) 500-2,040 and 1,000-4,080**
Spindle Taper	**2MT**
Spindle Thread	**1" x 8tpi (Ref T04M)**
Taper Tailstock	**2MT**
Distance Between Centres	**457mm**
Max Diameter over Bed	**305mm**
Tool Rest Stem Diameter	**16mm**
Overall L x W x H	**820 x 440 x 280mm**
Weight	**40kg**

STARTER KITS

	Code
SK100 Starter Kit	**101966**
SK80 Starter Kit	**101969**

LATHE AND STARTER KIT PACKAGE DEAL

	Code
Axminster AH-1218VS Lathe & SK100 Starter Kit	**717924**
Axminster AH-1218VS Lathe & SK80 Starter Kit	**717928**

BED EXTENSION

	Code
Bed Extension	**504511**

Buy with confidence from Axminster with the FREE 3 Year Guarantee – available on all Hobby Series machines

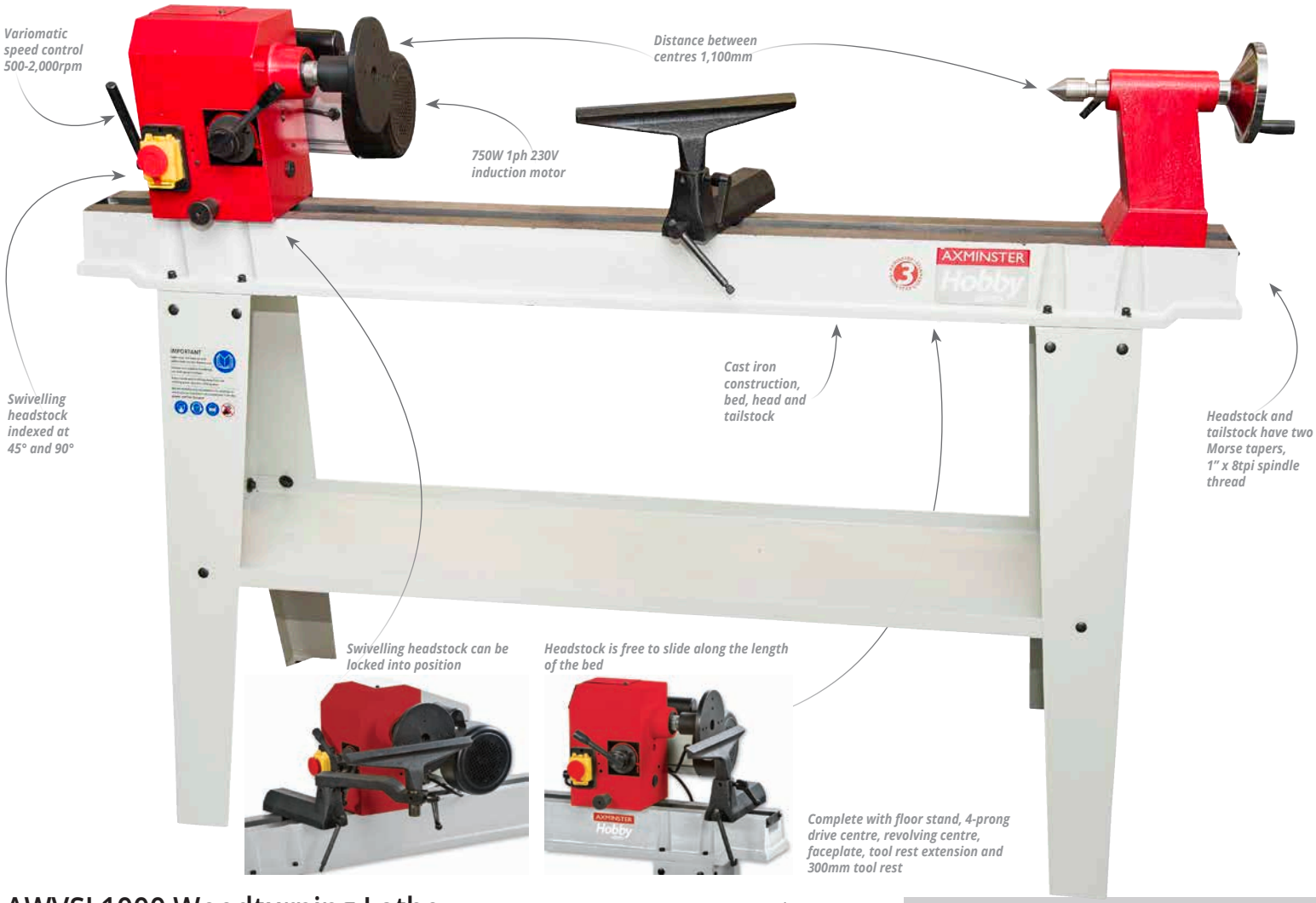

Swivelling headstock can be locked into position

Headstock is free to slide along the length of the bed

Complete with floor stand, 4-prong drive centre, revolving centre, faceplate, tool rest extension and 300mm tool rest

AWVSL1000 Woodturning Lathe

code: 501268

Four major features set this lathe apart, firstly the centre height is a full 185mm resulting in an impressive 370mm(14") maximum turning diameter over the bed.

This lathe has the capacity to turn larger diameter bowls without the need to rotate the head. Secondly, the distance between centres is a 1,100 mm which makes it superb for turning longer spindles and similar items such as lamp components. The third important point is that the swivelling headstock is also free to slide along the length of the bed, giving the facility to locate it in the most convenient position to suit the item being turned. Finally, the AWVSL1000 Woodturning Lathe possesses a more powerful motor to match the larger capacities.

This lathe is an accomplished machine with enough capacity to suit the most demanding hobbyist woodturner and it's now supplied with a pair of Axminster centres, plus a 4 prong drive as well as a revolving tailstock centre, a 150mm faceplate, an outboard tool rest extension together with a 300mm tool rest and stand.

It should be noted that the distance between centres will vary and be dependent on the type of centres or accessories used.

SPECIFICATIONS

Power	**750W**
Speed	**500-2,000rpm**
Spindle Taper	**2MT**
Spindle Thread	**1" x 8tpi (ref T04M)**
Taper Tailstock	**2MT**
Distance Between Centres	**1,100mm (43.3")**
Max Diameter over Bed	**370mm**
Tool Rest Stem Diameter	**25.4mm**
Overall L x W x H	**1,680 x 470 x 1,155mm**
Weight	**97kg**

STARTER KIT

- Made in Axminster using CNC production techniques
- Direct threaded chuck body ensures concentricity
- Stainless steel for maximum corrosion resistance
- Chuck features our SafetyJaw accessory mounting jaws
- Set includes dovetail jaws (C), matching faceplate ring and screw chuck
- Packed into a strong plastic storage box

	Code
SK100 Starter Kit	**101966**

LATHE AND STARTER KIT PACKAGE DEAL

	Code
Axminster AWVSL1000 Lathe & SK100 Starter Kit	**717925**

AXCALIBER SAW BLADES

The Axcaliber range of TCT circular saw blades offers an unmatched blend of choice, cutting performance and price.

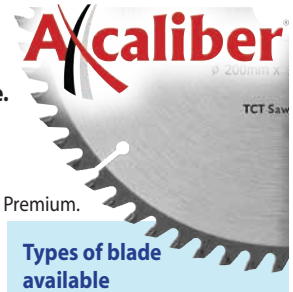

Manufactured in one of the most advanced facilities in the world, they are produced to the highest standards using the finest materials available. The range is in two parts, Contract and Premium.

The CONTRACT Range

The Contract range is from 165mm to 355mm and covers a wide variety of machines. They are tensioned, ground plates with laser cut arbor holes and anti-vibration slots for smooth running with micro brazed TCT tips ground to a razor sharp edge. Although considered to be our 'standard' blades, they are still great quality.

Types of blade available

- Rip Blades
- General Purpose & Combination Blades
- Fine Crosscut Blades
- Extra Fine Crosscut Blades
- Thin Kerf Blades
- Negative Rake Blades

The PREMIUM Range

The Premium range is aimed very much at the professional user. These blades give an exceptional cutting performance combined with a very reasonable price for such high technology blades.

The main features of the Premium saw blade that are not found on the Contract range are:

- ✔ Increased Accuracy
- ✔ Impact Resistant Tips
- ✔ Numerous Sharpening
- ✔ Noise Reducing

TOOTH GEOMETRY

With either alternate top bevel ground (ATB) or top centre ground (TCG) depending on the blade type, this often overlooked feature ensures best performance for each application.

Alternate Top Bevel Ground – ATB

Found on our coarse tooth blades. Creates a sharp cutting point and edge for a better cut quality without chipping or splinters. Generally used for cutting natural timber, plywood, veneer or hardboard.

Top Centre Ground – TCG

Found on our finer tooth blades. They combine a balanced cutting force, low tooth drag and free chip flow to eliminate chipping in brittle materials such as chip board and laminates. Used to achieve smooth cuts in hard materials such as MDF.

AXCALIBER BANDSAW BLADES

All Axcaliber blades are made from UK sourced stock, sized, welded, finished and packed in our own production facility in Axminster.

Carefully chosen production techniques and constant quality control checks ensure each blade will exceed your expectations. And if the weld breaks under normal use, we will replace the blade, no quibbles.

The Range

High Carbon

The 'blade of choice' for many users, especially so when upgrading from the original (which may often be of inferior quality) supplied with their machine. Best described as general purpose and are suitable for all those normal tasks in the workshop where a smooth, good quality, 'no fuss' performance is required, day in and day out.

Ground Tooth Bandsaw Blades

This newly developed material is designed for the production user with high feed rates of cutting. The diamond ground teeth are so unbelievably sharp (they stay sharper for at least 30% longer) that the blades work extremely well in all materials giving an exceptionally high quality finish and clean cut.

Premium Bandsaw Blades

If you hit the occasional nail with your bandsaw blade it invariably happens just after installing a new one! No longer a problem with these blades! They use M42 high-speed steel with 8% cobalt which has been welded to a spring steel alloy backing. All types of material can be cut with ease, including abrasive timbers such as teak as well as man-made boards like MDF and chipboard, where the glue used has little, if any, effect on the life of the blade. M42 blades are so resilient that reclaimed timber presents no difficulties, as the blade will slice easily through the odd nail buried under the surface.

Back Tooth Bandsaw Blades

Woodturners often prepare their own blank, which is where the back tooth blade becomes particularly useful, as they have been specifically developed for curvature cutting. The teeth on the rear of the blade are not sharp to handle but have the effect of clearing the back of the cut by widening the kerf, enabling a much tighter curve to be cut, making them an ideal choice for preparing timber for the lathe.

Ripper 37

These are specifically intended for wood processing and deep ripping tasks, fitting only a few larger machines where motors of sufficient capacity are able to handle the 32mm wide blade. The teeth are precision ground using CNC machinery and then induction hardened. Furthermore, to ensure a very long working life, each blade can be resharpened up to twenty times, offering the best possible cutting performance

Freshcut 37 GT

Made from bright carbon steel stock with precision diamond ground hard teeth, these blades give an exceptionally clean cut. The teeth have a light set which reduces the waste produced whilst the hook configuration provides maximum penetration. These blades are perfect for ripping all types of timber, the unique diamond precision ground teeth retain their edge far longer than normal milled tooth blades.

WOODTURNING CHUCKS

The Axminster chuck systems are devised to maximise work holding on the lathe. They are cleverly thought out and proven by our own turners and customers who, over the years, have offered ideas or constructive criticism.

Axminster Evolution SK114 Chuck

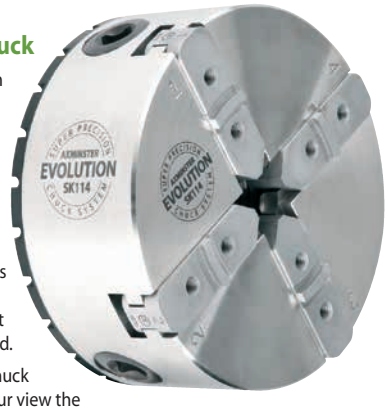

First drawn at a desk in Devon, the Evolution chuck has been machined and refined to make woodturning easier, accurate and more enjoyable. Our aim was to produce a chuck that was slim, keeping the weight of the work over the bearings. We achieved maximum accuracy by threading the body of the chuck for perfect concentricity. We also wanted a chuck that would suit the jaws already owned by our customers. Our first prototypes were tested by some of the most well known names in the woodturning world.

Taking the best features of our Axminster chuck designs over the past 20 years, we have in our view the most superb woodturning chuck ever made – the Evolution.

Uniquely the Evolution body is made of stainless steel making it totally rustproof. Every millimetre of this chuck is made in the UK and assembled in Devon. All of the components are machined in our workshop giving us total control so that the chucks we produce are supreme in terms of longevity and quality. We even designed a box to have the perfect fit.

The Evolution is a revolution in chuck making and, we believe, it is the finest woodturning chuck ever made.

Axminster Clubman Chucks

Building on the proven success of our ever popular K10 and K8 Clubman chucks, we decided to improve the design by producing the SK80 and SK100 stainless steel versions. Using this material allows closer tolerances during the manufacturing process as the chuck body no longer needs electro-plating which can vary in thickness. The threaded body is now a one piece unit, improving concentricity and minimising vibration during use. These chucks are made by us in Axminster using the latest CNC production techniques. All Axminster chucks are part of an excellent woodturning chuck system, just add a set of jaws or accessories from our extensive range to suit your needs. Supplied with our SafetyJaw accessory mounting jaws which have rounded corners and a chuck key, they are available in a range of thread options.

All chuck systems are compatible with our full range of jaw sets

Whatever your saw, it is only as good as the blade you put in it, so choose Axcaliber to make your saw really perform.

For more information visit **axminster.co.uk/axcaliber**

For more information visit **axminster.co.uk**

Buy with confidence from Axminster with the FREE 3 Year Guarantee – available on all Hobby Series machines

All Star Axminster Hobby Series lathes for the discerning woodturner

Whether you are about to take up the hobby of woodturning or have been turning for a couple of years, Axminster can offer everything you need, from entry level lathes to chuck starter kits.

From page 28.

Chuck Starter Kits

Packed into a strong plastic storage box, these starter kits include a set of dovetail jaws (size C), a matching faceplate ring and a screw chuck. This gives plenty of scope from mounting blanks for initial turning to final completion of another well executed project. All you need to do is choose the chuck thread to suit your lathe.

Clubman SK100

101965 T38
101966 T04M
101967 T01
101968 T23

Clubman SK80

101969 T04M
101970 T01

So sure are we of the quality of the Clubman SK100 and SK80 chucks, we cover all parts and labour free of charge for five years!

THE COMPLETE AXMINSTER EXPERIENCE

Our machines are displayed throughout our stores

The Trafalgar Way, **Axminster**, Devon EX13 5SN **Tel: 01297 35058**

Winchester Road, **Basingstoke**, Hampshire RG22 6HN **Tel: 01256 637477**

Valegate Retail Park, Copthorne Way, **Cardiff** CF5 6EH **Tel: 02920 025000**

Lincoln Road, Cressex Business Park, **High Wycombe**, Buckinghamshire HP12 3FF **Tel: 01494 885480**

North Shields Retail Park, Norham Road, **North Shields**. NE29 7UJ **Tel: 01915 005966**

Hamilton Way, Bermuda Trade Park, **Nuneaton**, Warwickshire CV10 7RA **Tel: 02476 011402**

Sheppey Way, Bobbing, **Sittingbourne**, Kent ME9 8QP **Tel: 01795 437143**

Gateway 49 Trade Park, Kerfoot Street, **Warrington**, Cheshire WA2 8NT **Tel: 01925 595888**

*For further information or to arrange a demonstration please call **0800 371 822** or visit one of our stores*

AXMINSTER Tools & Machinery