DISCONNECT THE MACHINE FROM THE MAINS SUPPLY BEFORE CONTINUING!

Code 104504 **Shark S-12 Overhead Crown Guard**

The Shark S-12 Overhead Crown Guard is for the AT254TS or AT254LTS Table Saw. This style of crown guard offers a higher level of user safety and a more efficient dust collection.

The heavy duty steel frame, cast joints and high grade alloys make it rigid yet easy to adjust. The large, unbreakable polycarbonate hood gives great visibility for safer use. The hood assembly can be set at any height above the blade through a linear guideway and supporting air strut. When you need to change the blade the whole top arm hinges back to the rear.

A must when using a dado cutter head, the crown guard will enhance this table saw, making your work safer and more efficient.

TWO PERSON ASSEMBLY!

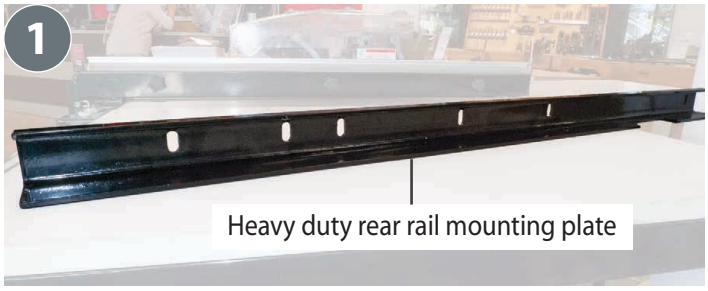

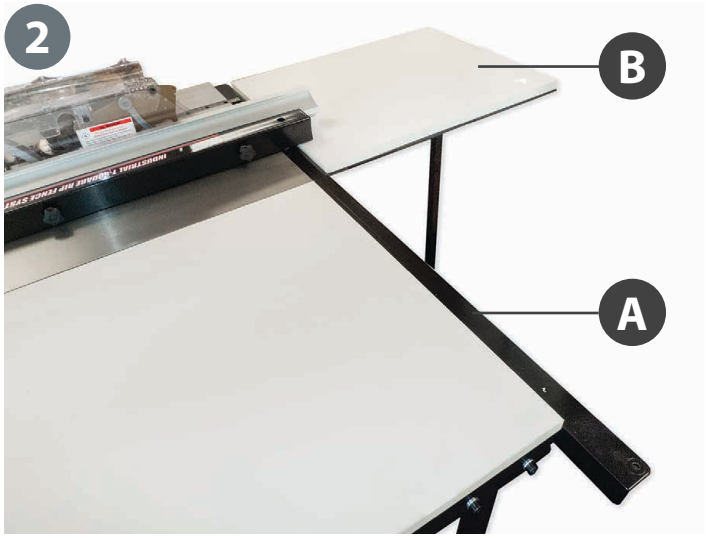

1. Remove the standard rear rail mounting plate (A) and the rear extension table (B). Locate the heavy duty rear rail, see diagram 1. Secure the heavy duty rail in place and replace the rear extension table assembly (B). Refer to 'Assembly/Setup and adjust both extension tables and rip-fence until correct.

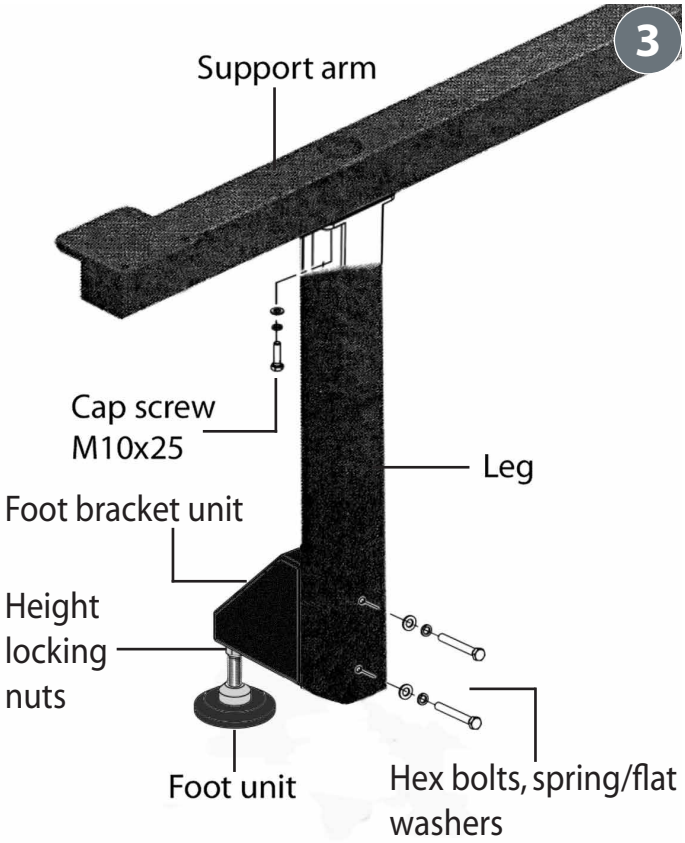

3. Attach the foot bracket unit to the leg with two Hex bolts, spring/flat washers and then mount the leg to the support arm by cap screws M10x25mm, see diagram 3.

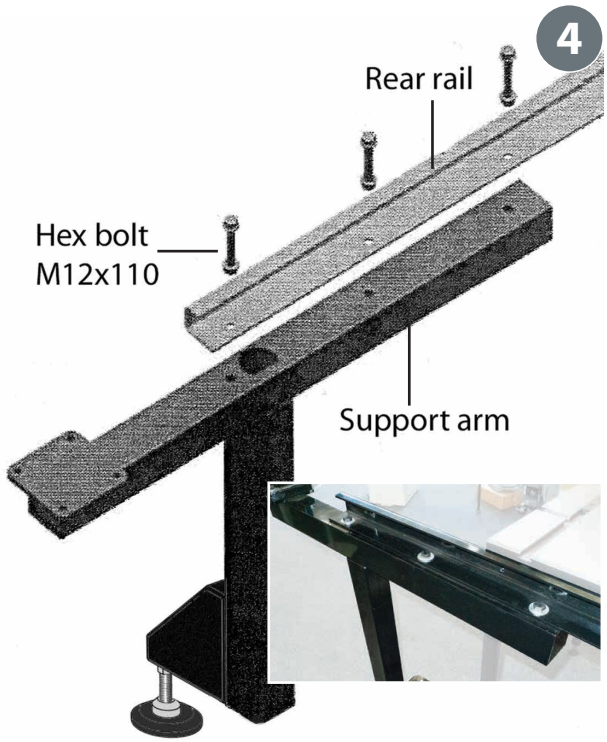

4. Install the support arm to the heavy duty rear rail by three Hex bolts M12x110mm, see diagram 4.

Continues over...

5

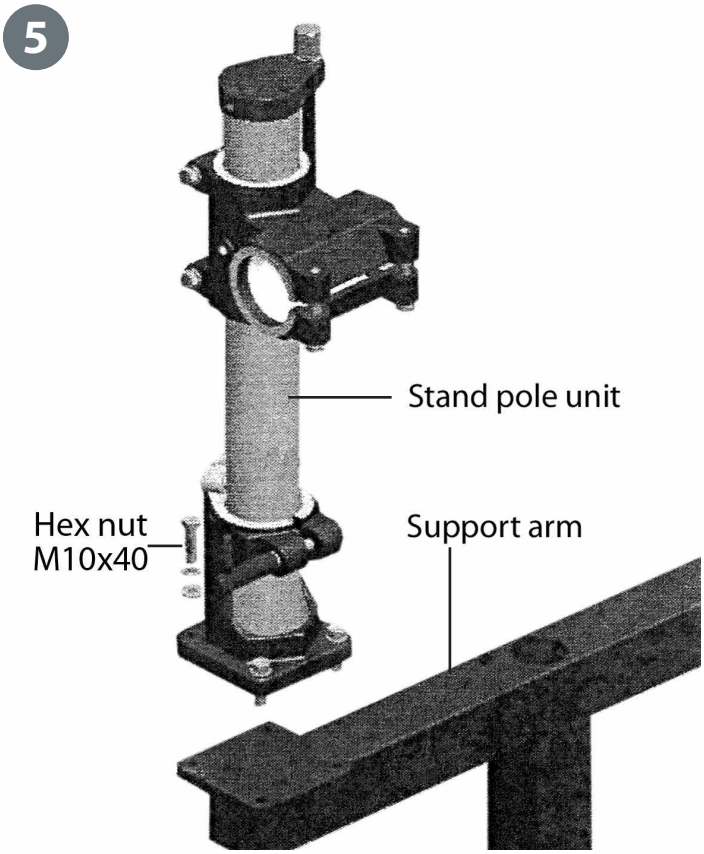

5. Install the stand pole unit to the support arm by four M10x40mm Hex screws and tighten securely, see diagram 5.

6

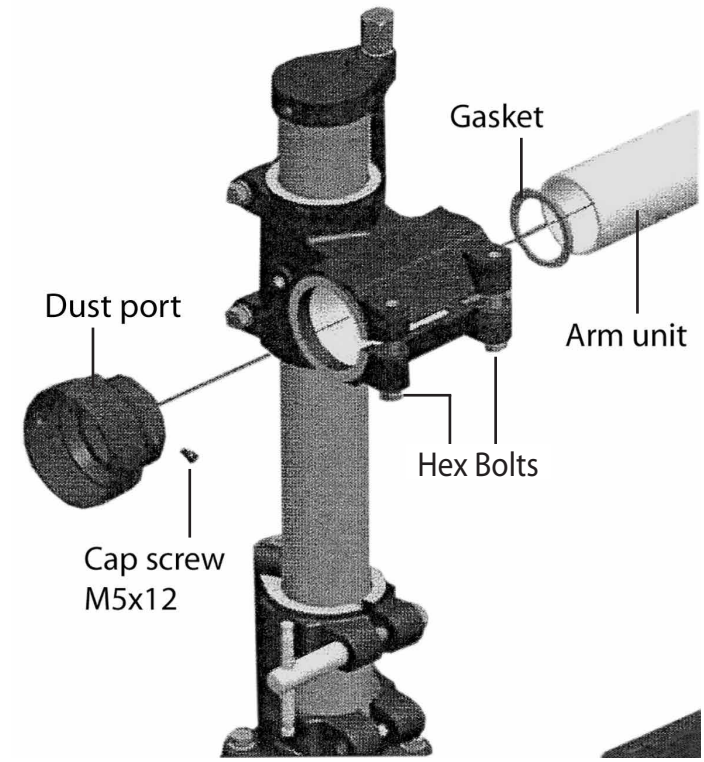

6. Release the bracket Hex bolts on the stand pole and slide the arm unit through the stand pole bracket assembly. Nip-up the Hex bolts, see diagram 6-7.

7. Fit the dust port and gasket to the arm unit pipe. Secure in place with the set screw M5x12, dee diagram 6.

7

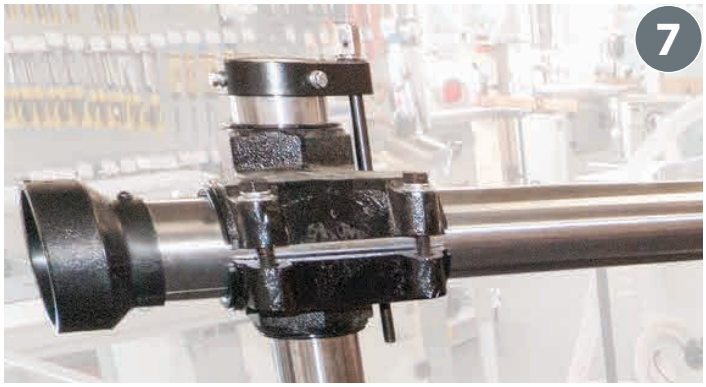

8

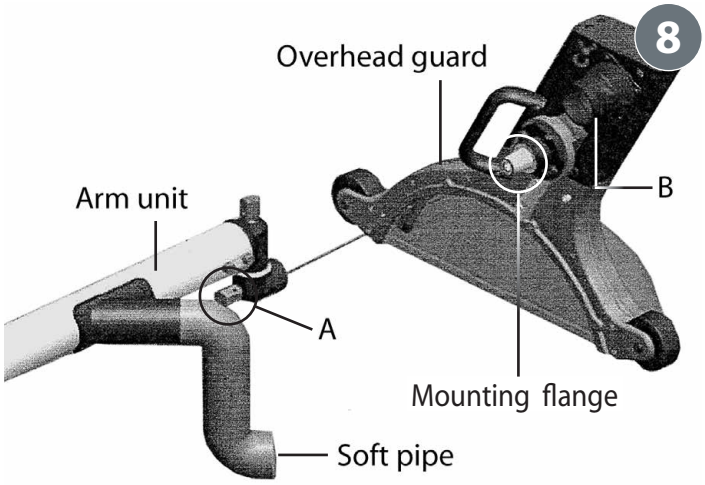

8. Line up the threaded square bolt (A) with the mounting flange on the guard unit and secure it to the arm. Fit a retaining clip over the flexible soft pipe and secure it in place onto the overhead guard assembly outlet (B), see diagram 8-9.

9

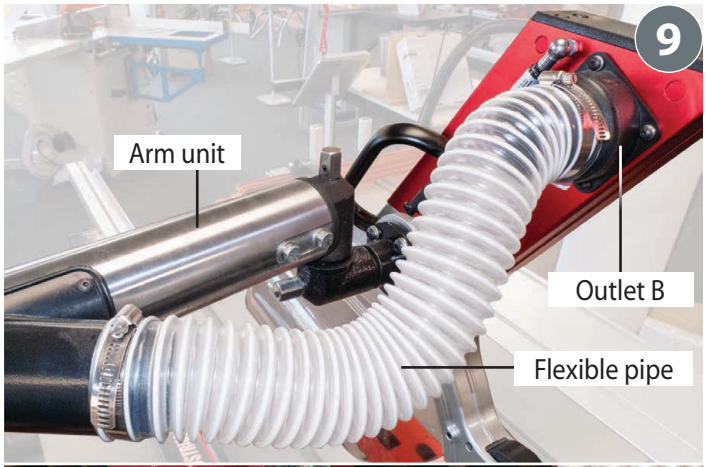

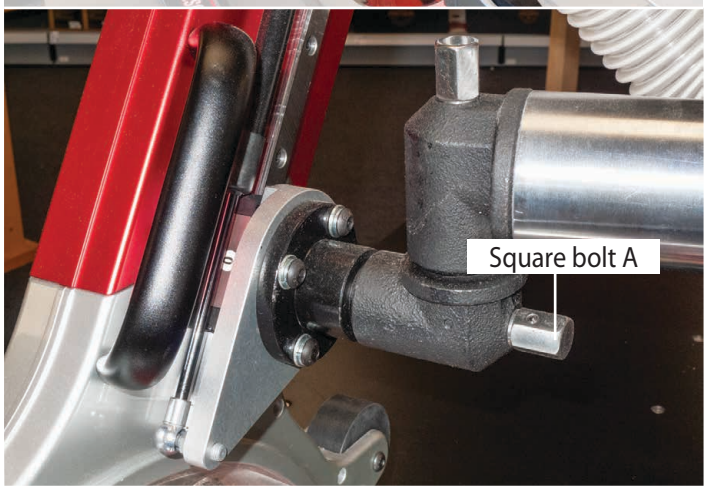

Continues over...

Overhead Guard Assembly

The overhead crown guard needs to be adjusted to the blade.

9. The crown guard must have 15mm clearance between the blade and the side of the guard, see diagram 10, fig 2. To adjust release the two Hex bolts holding the arm unit bracket assembly, see diagram 11. Push the arm unit forward or back until correct. Re-tighten the bracket Hex bolts.

10

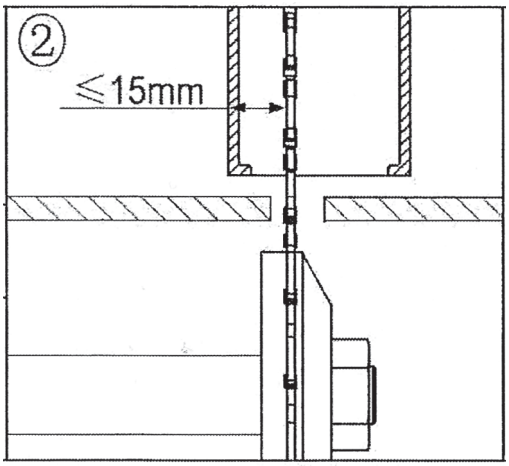

11

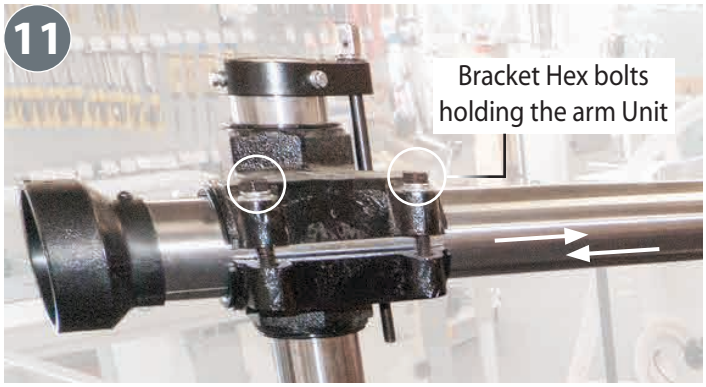

10. The overhead crown guard needs to be set so it sits 5mm above the top of the blade teeth, see diagram 12, fig 3. First release the two Hex bolts locking the arm unit assembly in place, see diagram 13. Loosen the stop nut (D) to allow you to set the height of the arm unit. Adjust the square bolt on the

12

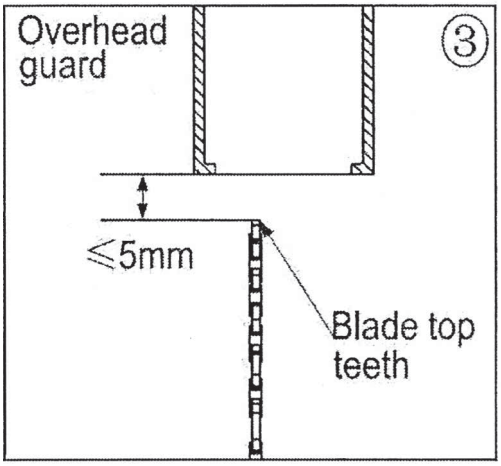

13

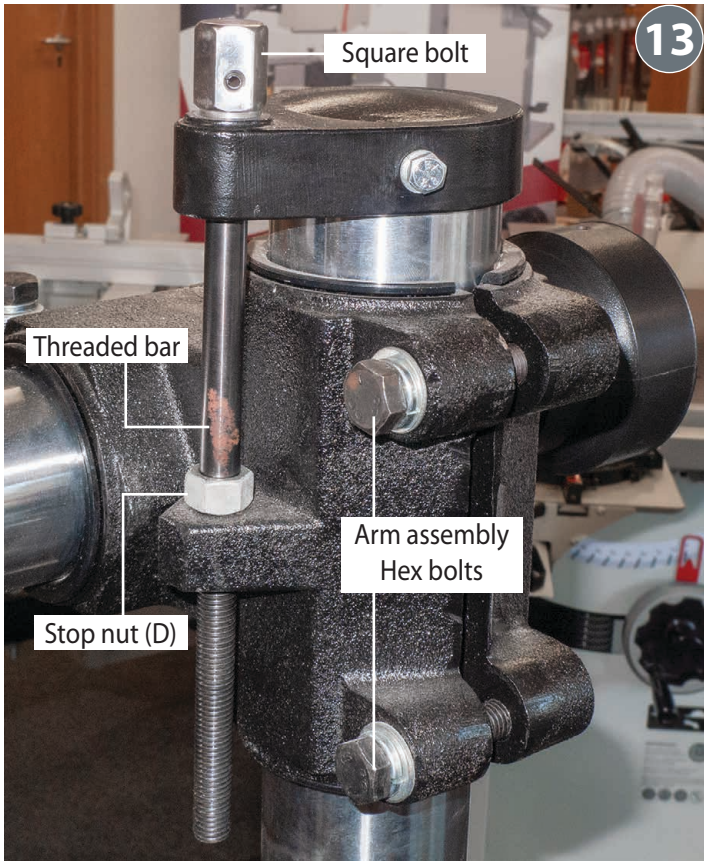

threaded bar (C) to raise or lower the assembly until the correct height has been reached, see diagram 13-14. Nip-up the stop nut against the casting to set the depth and nip-up the two Hex bolts on the arm assembly.

14

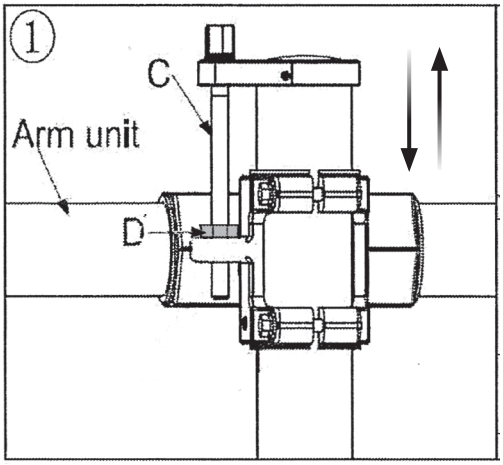

Overhead Guard Unit

The crown guard unit can be adjusted independently by adjusting the two square bolts (E & F) to the end of the arm unit, see diagram 15-16. When the blade is tilted over to 45˚ degrees you can adjust the guard to stop it coming into contact with the riving knive which is very IMPORTANT!

MAKE SURE THE RIVING KNIFE DOES NOT COME INTO CONTACT WITH THE GUARD ASSEMBLY. THIS IS VERY IMPORTANT!

Continues over...

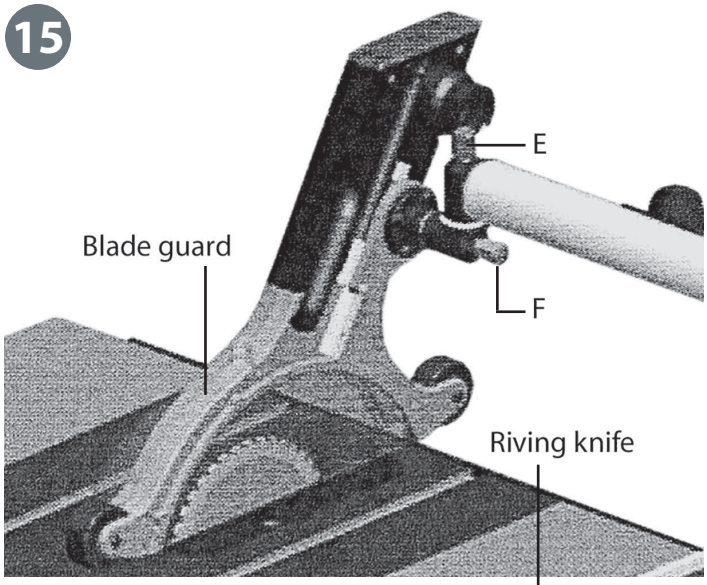

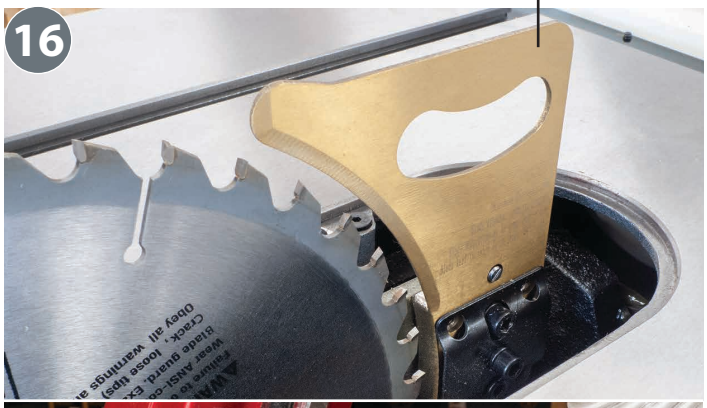

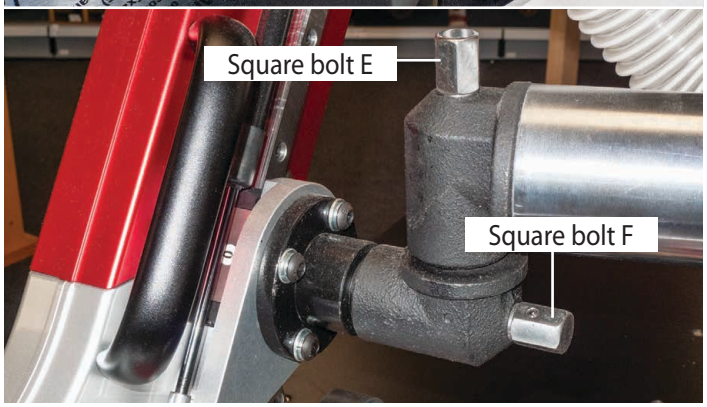

Overhead Guard Swing

The overhead guard can be swung out of way for making adjustments to the blade. The swinging action can be altered by adjusting the cam wheel stop (H) located to the base of the stand pole unit, see diagram 17-18.

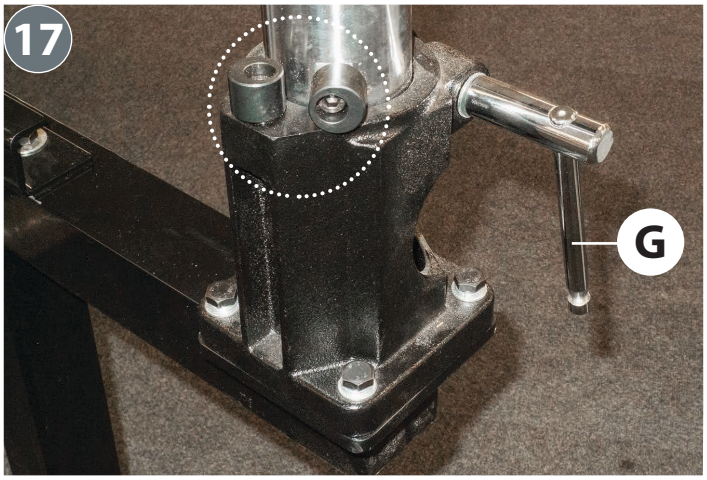

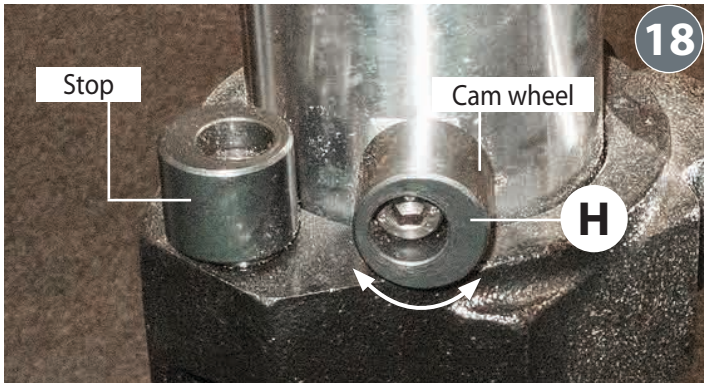

To adjust, release the locking clamp (G) to the base of stand pole unit, using the supplied Hex key rotate the cam wheel stop. Swing the arm assembly until the cam wheel is up against the stop, make further adjustment if required and tighten the clamp (G) when finished, diagram 17-18-19-20.

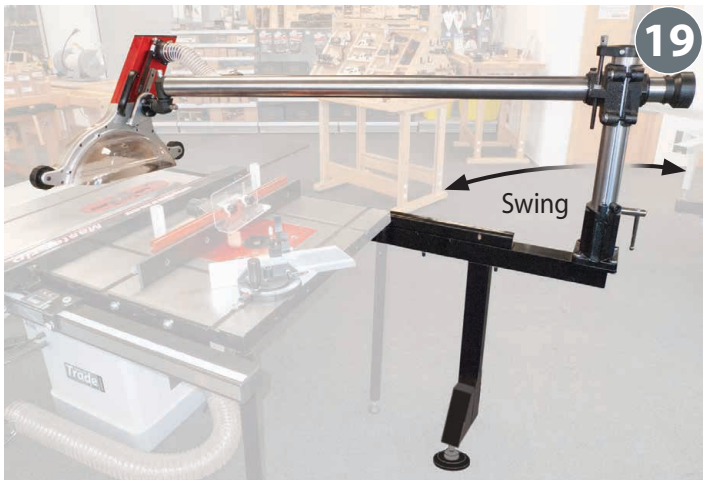

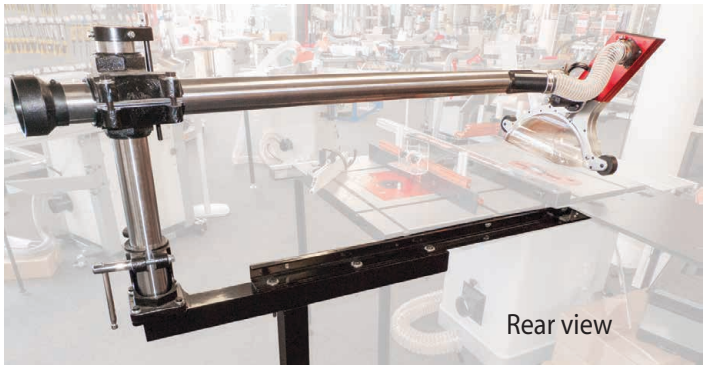

Overhead guard with Dado Blade fitted

IMPORTANT! IF YOU INTEND TO USE A DADO BLADE MAKE SURE YOU REMOVE THE RIVING KNIFE.