AXMINSTER TOOL CENTRE

# Digital Height Gauge

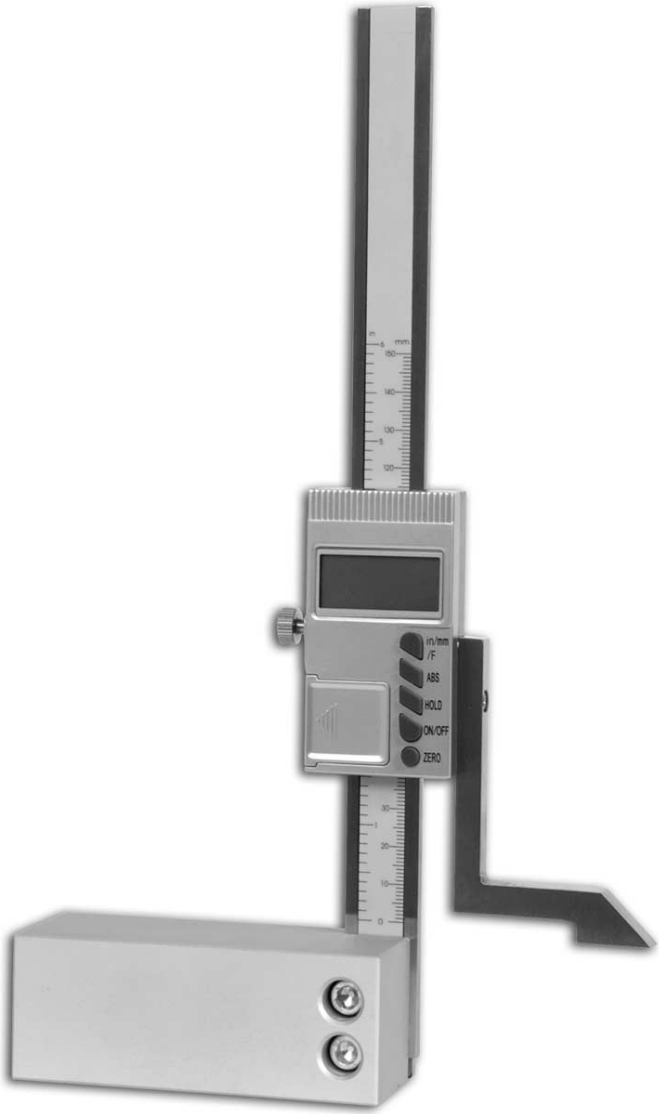


210041

User Manual

www.axminster.co.uk

# Index of Contents...

**Page No.**



**SAFETY!!** **The symbols shown on the cover of this manual advise that you wear the correct safety protection when using this machine.**


**Safety Protection Symbols**



AXMINSTER TOOL CENTRE

**Congratulations on the purchase of your "Axminster Digital Height Gauge"**

| **Model Number:** | **HD620** |
|---|---|

| | |
|---|---|
| 1 No. | Digital Height Gauge |
| 2 No. | Spare battery |
| 1 No. | Instruction Manual |
| 1 No. | Guarantee Card |

Having unpacked your digital height gauge; if you are not retaining the packaging to store your height gauge, please dispose of the wrapping responsibly.


Spare 3V Battery

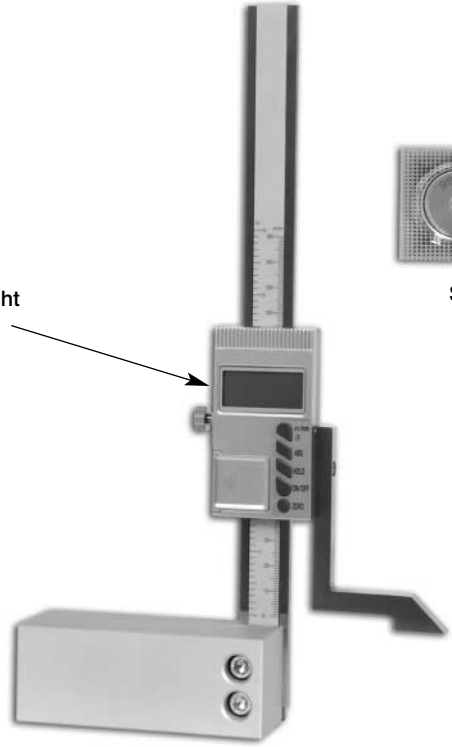

# Illustration & Description...

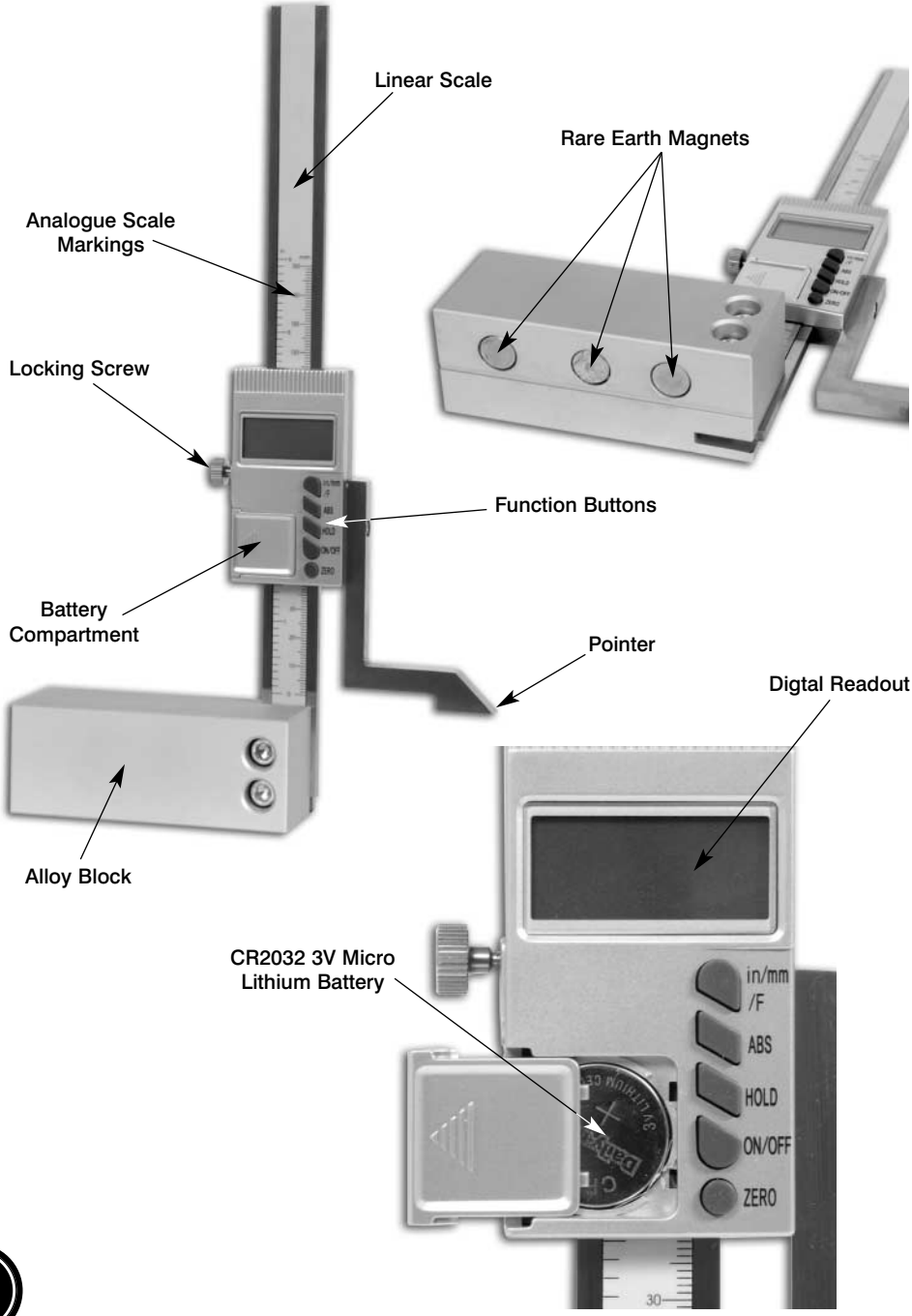

Please study the illustrations, so that you may understand the terminology we have used, and better understand the operation of your Digital Height Gauge. Note the positions and the functions of the various buttons on the Digital Readout, these will be more fully explained a little later in the text:-

The gauge comprises a precision machined alloy block, into which the Linear Scale of the Digital Readout (**DRO)** is bolted. This fixing is set very precisely at right angles to the base, to ensure accurate measurement. The linear scale is also marked with Analogue Scales from 0-6” and from 0-150mm. These scales are read against the lower edge of the **DRO**.

There are three Rare Earth Magnets set into the base of the block, to enable/aid the gauge to be held flat against a ferrous metal surface. **Please Note.** The magnets are not sufficiently strong to support the whole weight of the gauge on a vertical surface; although the base will remain in flat contact with the surface the gauge is liable to slip.

The digital readout is mounted on the linear scale and has an ‘L’ shaped pointer attached to it; there is also a small Locking Screw with a serrated knob; that will clamp the **DRO** in position if tightened **(Do not over tighten). NOTE** Please ensure the locking screw is loosened before attempting to move the gauge.

The Battery Compartment is on the lower front face of the **DRO** and can be opened by a ‘press down’ and slide motion in the direction of the ‘arrow’ thumb grip. If you are replacing the battery ensure that it is positioned with the + marking uppermost.

The **‘L’** shaped pointer is ground to a fine edge to enable the most accurate measurement; it is also hardened so that the points can be used for scribing lines at the set height.

P.S. When scribing, please hold the pointer only, **DO NOT** apply pressure by gripping the gauge proper

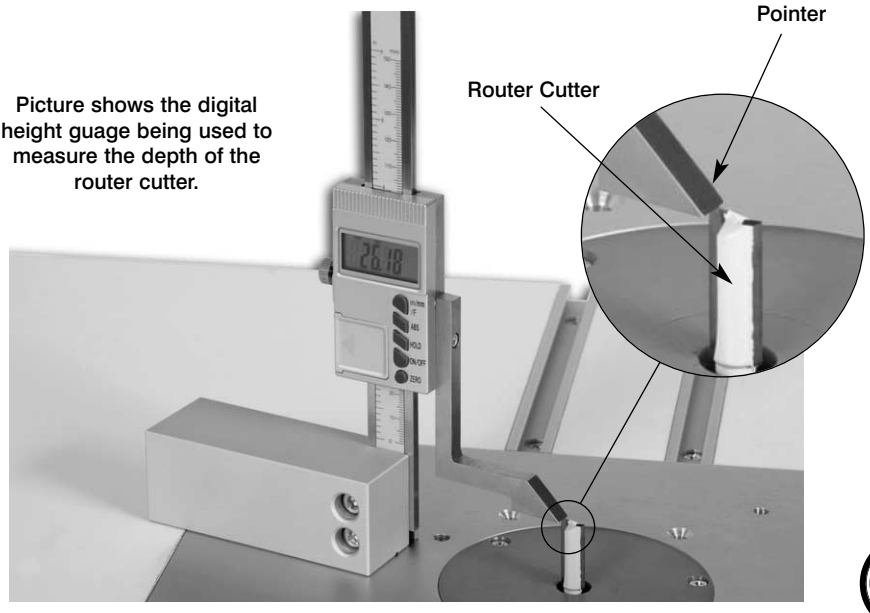


Picture shows the digital height guage being used to measure the depth of the router cutter.

## Function Buttons

**a) Scale Change Button Marked in/mm/F**

This button enables the scale to be altered from:-
i) metric mm's to two places of decimal…….. (mm)
ii) imperial to 3 ½ places of decimal (the ½ place will indicate 0.0005 if measured) ……..(in)
iii) imperial to 1/64" ……..(F)

**b) ABS Button**

This button enables the reading to be 'split' and totalised.
e.g.

1. Set the pointer to zero.
2. Move the pointer. DRO reads 25mm
3. Press the ABS button. DRO reads 000
4. Move the pointer. DRO reads 20mm
5. Press the ABS button DRO reads 45mm
6. Press the ABS button again DRO reads 000
7. Move the pointer. DRO reads 15mm
8. Press the ABS button. DRO reads 60mm

The illustration is given in mm's, ABS works equally in imperial.

**c) Hold Button**
This button enables the reading to be 'frozen'. The **DRO** will retain this reading, (as an 'aide memoire'?) until such time as the Hold button is pressed again. **NOTE.** The reading is not held if the **DRO** switches off automatically.

**d) ON/OFF Button**
Self explanatory . In the event that you forget to 'switch off', the **DRO** is equipped with an automatic function that will switch the device off after approximately 5mins if the gauge has not been used during this period. Switching 'On' will return the gauge to its original settings. **(NOT c)** The Hold Function. **(See NOTE)**

**e) Zero Button**
This button will set the **DRO** to 0000, at whatever position the pointer is, when the button is pressed. The **DRO** will then read either positively (if the pointer is raised) or negatively (if the pointer is lowered). **NOTE** Zero will remain at the position set, if automatic switch off occurs and the **DRO** is turned on again.



# Illustration & Description...


ABS symbol

a)Scale Change Button

b) ABS Button

c) Hold Button

d)ON/OFF Button

e) Zero Button


Display in Metric mm's to
two places of decimal (mm)


Display in Imperial to
3 1/2 places of decimal (in)

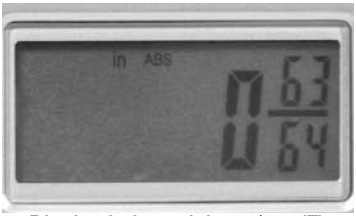


Display in Imperial to 1/64" (F)

# Maintenance...

No Maintenance, keep clean and dry. Change battery if display is blank. Store away from direct heat or sunlight.

# Digital Height Gaiuge

# 210041

AXMINSTER TOOL CENTRE

Axminster Devon EX13 5PH UK

**FREEPHONE 0800 371822**

*www.axminster.co.uk*