CRAFTPRO KITS

Salt & Pepper Mill

Instructions by Colwin Way

175mm Salt Mill Kit	**Code: 300275**
175mm Pepper Mill Kit	**Code: 300272**
300mm Salt Mill Kit	**Code: 200332**
300mm Pepper Mill Kit	**Code: 200330**

What's Included

Salt Mill Grinder Kit

Pepper Mill Grinder Kit

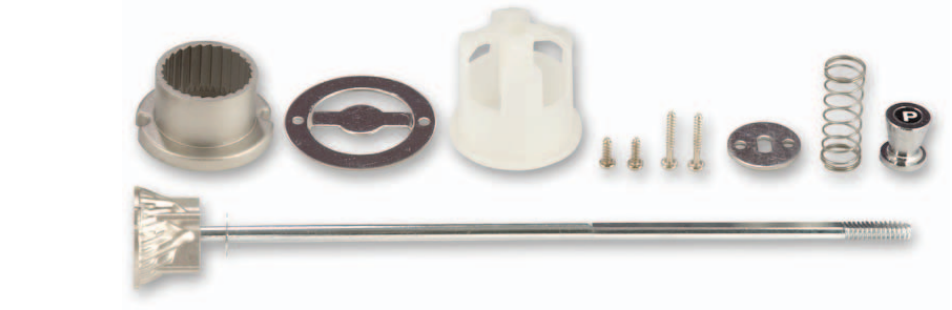

What's Required

Tools

Drill Bits

	Pepper		Salt
Size	Code	Size	Code
28mm	502053	25mm	502052
35mm	501936	32mm	501935
38mm	501937	35mm	501936
18mm	501926	18mm	501926

Turning Tools

Tool	Code
Roughing Gouge	611180
Bowl on Spindle Gouge	611184
Parting Tool	952452
Skew Chisel	611187

Finishing

Abrasive Pads

Pads	Code
100g	808489
150g	800491
240g	800493
400g	800495

Finishing Oil

Chestnut Finishing Oil	Code
500g	118003

Turning Instructions

Section 1

Process 01

• Roughing Down

Process 02

• Making Spigot
To hold in chuck, ensure you repeat this on both ends.

Produced in cooperation with the Axminster Skill Centre
axminsterskillcentre.co.uk

Process 03

• Dividing Head
Divide your blank ready for parting.

Process 04

• Parting Cut
Leaving roughly 25mm solid timber.

Process 05

• Sawing parting cut
Through remaining spigot.

Process 06

• Attaching the Chuck

Process 07

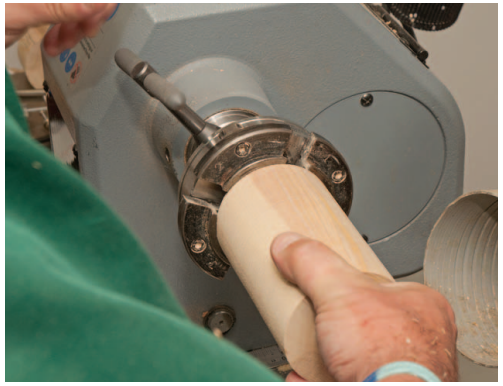

• Mounting the Blank

Process 08

• Drilling large hole

Salt	35mm (Depth 4mm)
Pepper	38mm (Depth 6mm)

Process 09

• Drilling second hole

Salt	32mm (Depth 3mm)
Pepper	35mm (Depth 3mm)

Process 10

• Drilling final hole

Salt	25mm
Pepper	28mm
Depth	Just over half way

Continues Over....

Section 2

Process 11

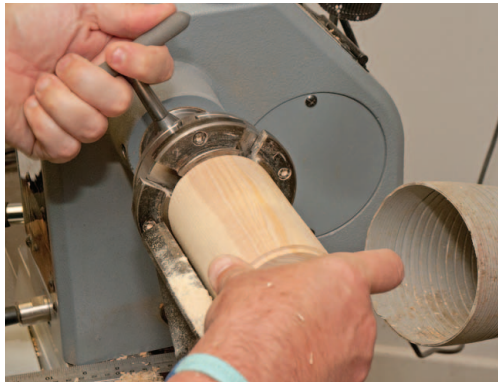

• Turning the piece over
Reverse the blank.

Process 12

• Drilling from other side

Process 13

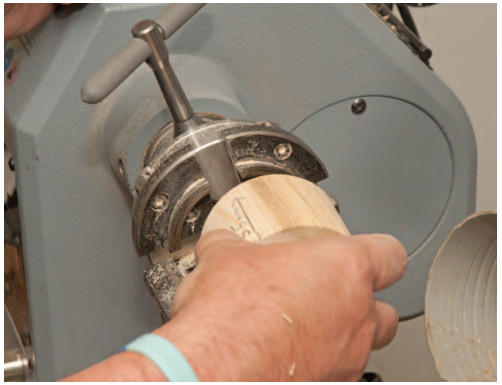

• Mounting top section

Process 14

• Drilling the holes
Firstly with a 18mm bit to 2mm deep then all the way through with a 5mm bit.

Process 15

• Creating Spigot
To match main centre hole.

Process 16

• Checking with Calipers
The Spigot to locate into the main hole in the bottom section of the grinder.

Process 17

• Waste piece of timber
Using waste piece of timber to create drive spigot.

Process 18

• Reassemble
Reassemble the two parts of the grinder and mount on the lathe.

Continues Over....

Process 19

• Roughing down
Roughing down the two parts together.

Process 20

• Turning the shape (part 1)

Process 21

• Turning the shape (part 2)

Process 22

• Sanding down

Process 23

• Polishing or Oiling the grinder

Process 24

Assembly Instructions

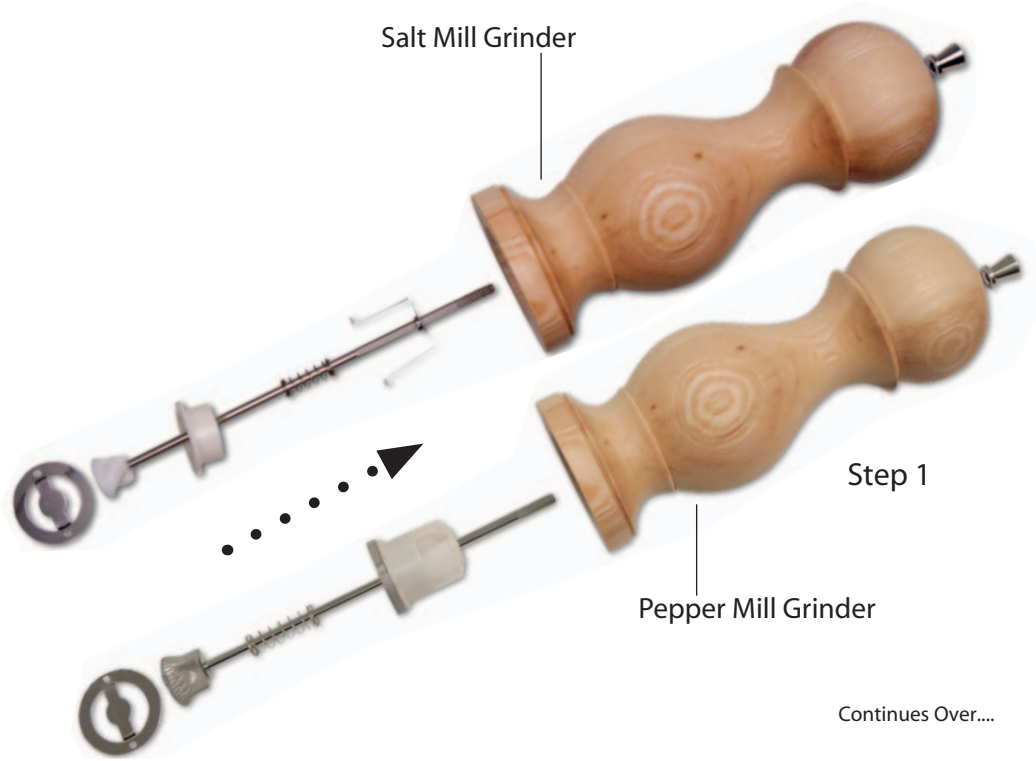

Continues Over....

Turning Instructions

Step 2

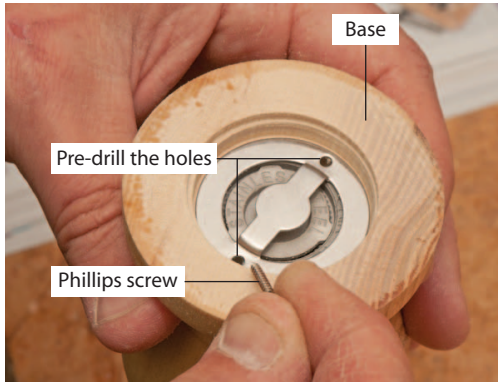

Step 3

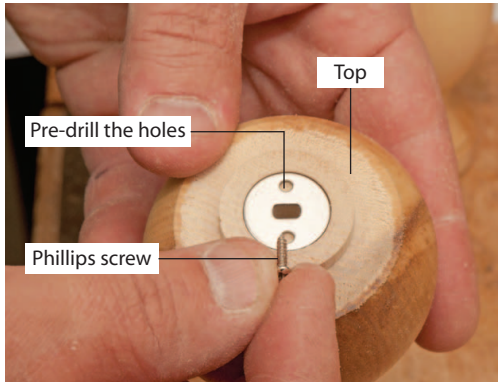

Step 4

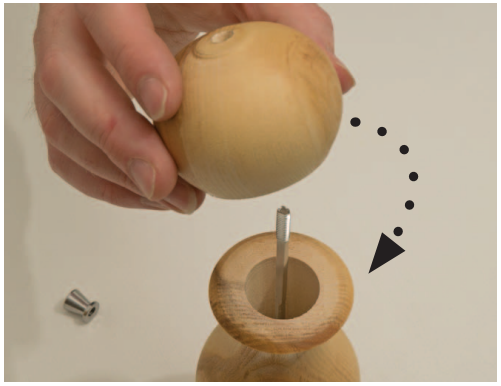

Step 5

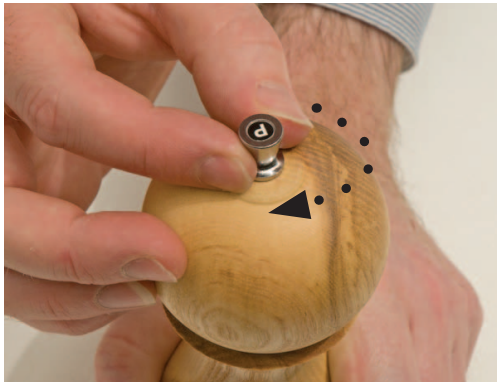

Mill Assembled

Continues Over....

Salt & Pepper Mill Diagram

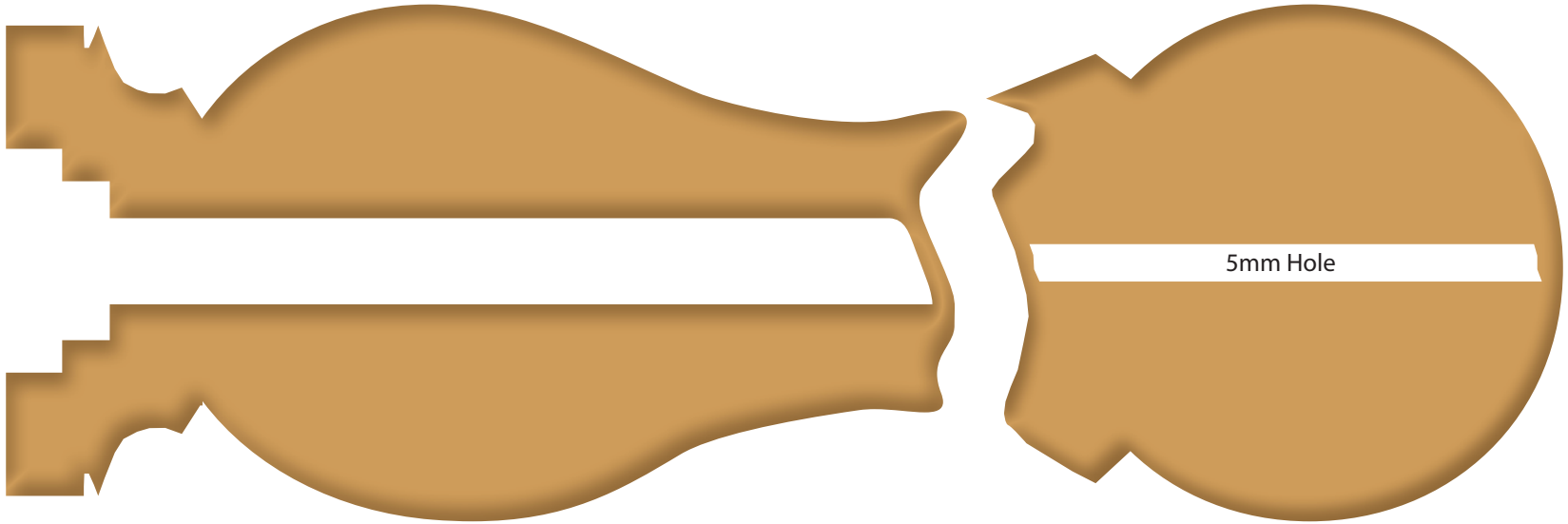

Salt

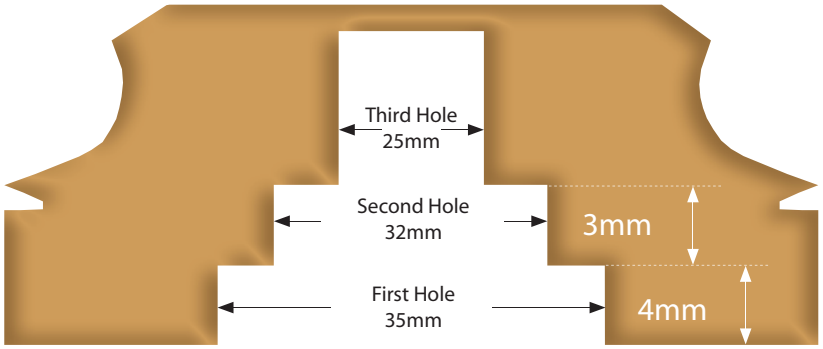

Pepper

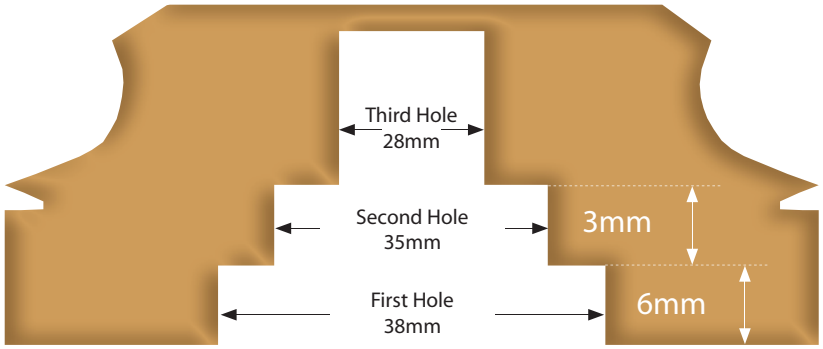

Axminster Tools & Machinery Ltd
Weycroft Avenue, Axminster, Devon EX13 5PH

axminster.co.uk